University of Central Florida
Senior Design 2
EEL 4915

Web Based Home Monitoring System

<u>Group B</u>

Jon Carver

Jason Heintz

Dennis Seda

Sean Willis

Date: December 13, 2010

Table of Contents

1 Introduction

1.1 Overview

The purpose of this project is to develop a low cost implementable prototype for monitoring one's home. The goal is to create a prototype that can be used as a base step for future development of an actual product. The idea behind this project came from a very common situation in which a home owner leaves for work in the morning. The homeowner gets to work and realizes that they forgot to lock up the entrance to their home. The group wants to relieve home owners of this stress by developing a prototype which will allow them to monitor their home. In the above case, the team wants to go further and not just allow home owners to monitor the home, but to have control of the situation and actually lock the home while away from the house. Using a central processing unit, temperature sensors, motion sensors, and Web access the prototype should give the user the ability to monitor doors and windows of their home. This project will be completely funded by the four developers.

The core design problem will be how to integrate all of the individual components including the sensors and Web access to allow users the ability to monitor their home continuously while away. The best component for integration is a field programmable gate array (FPGA). The team decided to use temperature and humidity sensors to monitor the home. As a result there will be a brief discussion of the specifications which the group has chosen for these components, the models which were chosen, and what lead up to the final decision. The group decided to use the programming language of C# for the implementation of the web access capability. Several languages will be brought up for discussions in hopes of assessing the advantages and disadvantages of each with regards to Object Oriented Design, ease of use and implementation, and also previous background knowledge. How Web access will communicate with the processing unit and sensors will be brought up in greater detail later in the paper.

Factors which also need to be considered are a workable timeline. This includes the expected time for ordering parts and delivery. Time is the one factor which cannot be controlled. As a result of this fact it is something which must be worked with and not against. Otherwise, the project will not be able to meet the requirements of the design in the allotted time given There will be a more in-depth discussion of the expected time for implementation and the priorities of the developers on a month by month basis illustrated later in the paper. Leading to a sense of security the project will be finished in the allotted and meet the specifications set for its success.

Finally, a conclusion will be made at the end of the project's development phase as to how successful it was meeting the specified requirements and specifications. The team will also be evaluated as to how well our project was designed based on some of the criteria discussed above and more which will be explained later in this paper. This project is a prototype and should not be considered a legitimate model for future manufacturing of the design.

1.2 Executive Summary

The project is viewed over two different components of the house. The first component is energy efficiency, and the second component is security. The two components that are implemented within this monitoring system have a large amount of functions and tasks that can be performed. The system provides the capability of saving energy within the home by using the outside air to cool off the house. When a house has a lot of windows in it, it can become very hot inside the home without an AC running constantly. The heat from the sun is able to come into the house and heat up different elements within the house and increases the temperature within it because there is no circulation of air. Since the house is fully enclosed because all of the windows and doors are shut, it is really difficult for the heat to escape. One portion of the system is used to prevent this from happening.

The automatic windows are a key element in making sure the house can use the external conditions to its advantage. Through research on windows, motors, and sensors, the group was able to find the most cost efficient and reliable way to implement this task. The research consisted of finding the lightest and most cost efficient window available. This window had to be able to slide open and closed without any issues with sticking or weight. The window also needed to be a vertically sliding window for the motor to properly pull it with the least amount of friction against the sides of the frame. The motor needed to be researched intensively because there were so many specs that needed to be accurate because of the placement of the motor. The motor needed to be under a specific size so that it could fit within the wall. It needed to use a DC power source to power it because DC is the type of power that the circuit board will produce. The motor also needed to contain a high torque so that it would be able to lift up the window by turning the rod at the top. The motor also should have multiple input voltages so that when the group tests it with the corresponding window, the motor will be able to be tuned by the CCA so that an appropriate amount of voltage that could be applied to it. This is a good aspect to have on the motor because it needs to be able to lift the window but should not do it at a fast rate, so it may have to be tuned for the specific window that it is lifting.

The sensors within the system need to also be highly researched so that the system can receive the proper information from that sensor. The temperature sensors should be compatible with the type of circuit board that is being used. If the sensors are not compatible with the circuit board that is being used then the sensors will not be used at all. The sensors should be able to accurately calculate the temperature outside and inside the house and send that information to the circuit board. If the temperature is wrong then the whole system will not work properly. This means that finding the proper temperature sensor that has a low cost and high reliability is a must. The humidity sensor is another important component that needs to be researched for its reliability. The humidity sensor should give an accurate rating on how moist the air is outside and whether or not it is raining. This is important because if the sensor is inaccurate then it will be more likely that rain will come inside because the windows will not know to close. This means that when the humidity sensor is properly compatible with the circuit board and the sensor can

send the information to it quickly, the board will be able to shut the window in a timely manner.

The door lock is the safety portion of this system. The reliability on the solenoid within the door and within the wall is very important. If the solenoid within the door fails to work properly, then the whole purpose of the system has failed. The solenoid was extensively researched so that the group would find the most reliable, most cost efficient, and best fit solenoid that they could. The solenoid works hand in hand with the sensors. This is because the sensors (like those found on the window) will tell the user whether or not the door is open or if it is unlocked. If the sensors are inaccurate then the user does not have a reliable source to view. Every component of the door and window system has been extensively researched and studied so that the group could find the most efficient and reliable tools available.

The web-based portion of the system is the key component that makes the ability to view the system meaningful. If the program was not web-based then there would be no point in having a door lock system that has to be controlled from inside the home. The programming language that the web-based system is built from was highly researched so that the system would be able to easily send information to the circuit board from a well designed interface. The interface of the program was designed to keep the user in mind. It is an easily understandable image of the layout of their home that in interactive. By clicking on different portions of the floor plan, the user can view information on each active part of the system.

The system has been developed by the entire group with everyone collaborating and combining their information to make the each part join together with ease. The system was designed as shown in Figure 6.1a. This shows how each piece of the structure was brought together into one system. It shows how the H.S, T.S, Window Motor, and Door Lock all combined into the CCA which sent information into the Server and then to the Web. This shows the entire layout of the project and how each peace connects to another. The Key within Figure 6.1a shows who was responsible for each task and what the abbreviations within each part stand for. The block diagram helped each person understand exactly what tasked they were assigned to and that task effected the entire design.

Figure 1.2a - System Block Diagram

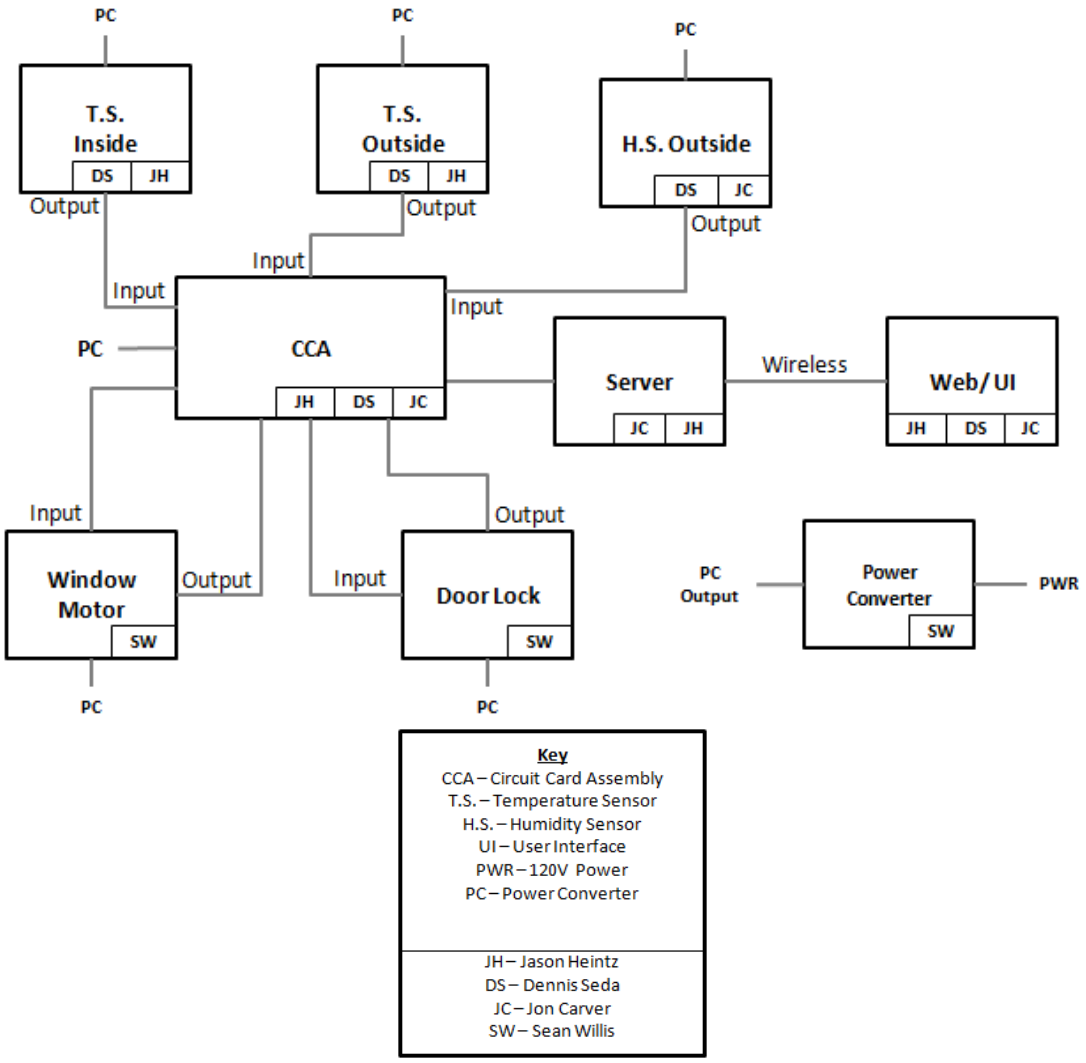

1.3 Problem Statement

The purpose of this project is to create a web based monitoring and controlling system for a home. People who would like to know what is going on at home or just want to regulate their energy consumption whenever they are away usually have no way to do so. If someone forgets to lock their front door or close a window before they go to work, what could they do about it? This is where the project will come in handy with solving these problems.

With this system the owners of a home will be able to use a computer that has internet access to check there home to make sure their doors are locked and their windows are closed. Some people may forget to lock a door when they are in a hurry to either go on vacation or go to work, but now they can double check without having to drive back home. The website will provide a floor plan of the user's home with doors and windows

emphasized so that if one is unlocked or open it would alert the user to which one is open. This is shown to the user by having a red light over the window or door that is open. After finding out that the front door may be unlocked the user will be able to click on an icon over the door. A secondary panel will show up on the screen that will allow the user to click a button that will lock the door. This mechanism also works the other way; if the user realizes that they need to let someone into their home, they can click on the door and the same panel will show up. This time it will allow the user to unlock the front door. All the user needs to do is click the button and the door will unlock, allowing a guest to enter their home. Along with this function the windows will be able to be open or closed by the user's discretion.

Most homes have AC systems that run all the time. When out of the house, people are not able to open or close their windows to regulate the air flow throughout their home. To save money people try and open up windows whenever it is colder outside then it is in their home so they don't have to use more energy because of running their AC. This is always a good money saving idea but if the owners are not at home then there is no way for them to open and close the windows in their house to regulate the air flow through it. This is why the group has decided to make an automated window system. This system will allow the owner to be away from home and not have to worry about manually opening and closing the windows. The system will include a temperature sensor inside and outside the house so that it can calculate if it would be efficient to open the windows or not. It will also have a humidity sensor located outside the house so that if it starts to rain, the windows will automatically close. The user can also override the system and close/open the windows from an external location through the website that included the floor layout of the home with access to the door and window controls.

1.4 Project Objectives and Goals

The goal of the home monitoring system is to effectively and safely communicate with the home owners through the Web. The system will have two primary functions. The first function will be to monitor the house. Monitoring the house includes transmitting information back to the homeowner about the temperature inside and outside the home. The reason for notifying the owners of temperature changes is to reduce energy consumption and to make sure the temperature inside the home meets the specifications of the owner. The system will also monitor the moisture on the windows of the home. The purpose of this functionality is to gather information about the probability of rain. The final monitoring functionality should be a sensor which will send information to the homeowners if the doors to the home are unlocked. This system ability will make sure that the home is secure from outsiders.

The second primary function of the home monitoring system will be to give the homeowner control of the system. The reason for this logic is simple, what good is being aware of the status of the home if one cannot act upon this information. So, to make sure that information is not known in vain the system will have several capabilities. One of the more important capabilities is the ability for the home owner to lock the door while away from the home. This capability will be made possible through the use of the Internet as a

means to communicate with the system. The front door of the home will be equipped with a solenoid as a means of locking the door. This is the vision for an actual product, for the actual prototype a makeshift door will be made. Another capability will be the ability of the system to respond to commands to open and close the windows. The team will be developing a chain system to be placed on windows for a home which will operate autonomously on command through our system. The goal is to allow the homeowner the ability to open the windows at their leisure when away from the home. The team will also be making a makeshift window to represent this portion of the system similar to the door. The web site is a separate component to the home monitoring system.

The website will be password enabled for security reasons. The site will illustrate a blueprint outline of the owner's home. Our goal is to give the owners real time information regarding the status of their home. There by allowing the home owners the ability to make decisions about the security of their home at a moment's notice. This project simulates a reality of life when it comes to information. Information regarding the security of a person's home is the type of information which is critical to the future of someone's well being and livelihood.

There is an opportunity through this project, to make a system which is reactive to intrusion. If it possible to make the system autonomous in the detection of not only physical intrusion, but also software intrusion then this goal will be pursued. The internet is heavily used by society. Internet has transformed from a luxury to now more of a necessity. In the creation of the Internet, a growing concern has become apparent toward the security of its users. If there is time in the design process of this prototype this should be considered as an option. The idea at this moment is to create software application which interacts with the website. The first component to the security is the number of attempts for password access. There should be a maximum of three attempts to type a password before the system locks out the user. The password should lock out the respective user for at least twenty fours. As a second part of this security feature the system logs out users who navigate from the website. This sub feature is really to protect the users of the system. Two hypothetical situations, which the system wants to prevent are explained below.

Assume a user is at a station which is used by multiple users. Computers are everywhere and a very integral part of our society. It is very easy for one of the system users to use a public computer to display private information. In this scenario, the system developers don't want everyone to be able to access the home owner's private information. Another scenario which is a possibility is a user of the system is using a computer which is being observed by hackers through hackers. The only control the system has is over itself, and not over the end user's system. So, as a precaution for the safety of the system, users are logged out of the system if they navigate away from the website. In the scenario where a user is locked out of the website, an additional feature which would be useful is if as a result of this action the home system went into lock down. The only way to enter by this point in the security would be with a safety release key to the home entrance. This command to the system should not result in much addition code for the system to

decipher. The most difficult phase would be testing the feature and how effect it is in terms of performance.

1.5 Project Motivation

Motivation for this project comes from three common human characteristics. The first is the need to be secure. The second is forgetfulness. The third is laziness. Since the beginning of the human race there has been a need for security. In the modern day it revolves around keeping loved ones and personal belongings safe. This can be seen clearly when one looks at the modern home. There are several locks on each door, one on each window, and an alarm system on many houses today. However each of these requires the homeowner to remember to set them. Thus if the homeowner leaves and forgets to lock the door, the point of the lock is void. The same is true with the windows or the alarm system. This project attempts to make it easier for the average homeowner to feel secure in their home and to lessen the burden of remembering to lock everything. This will be done by implementing a remote door lock and window control system. The home will be monitored by sensors around the home and the status will be available online. Furthermore the door locks and windows will have motors and the controls will also be available online.

Not only will this system be useful when making sure the home is secure, it will also be helpful when the homeowner forgets their keys. For example, say the homeowner has a child who rides the bus. The parents are home when the child leaves in the morning and the child forgets their keys at home. After school the child gets home and realizes they are locked out. They call their parents at work. With this system, instead of taking time off work and driving all the way home just to let the child in, the parent logs online, enters the correct password, and remotely unlocks the door. The security features for the online controls will be sufficient to prevent unwanted people from accessing them. They will have to be secure enough that people cannot hack in, but at the same time they should be easy enough for the homeowner to use that one is not put off by extra complications.

So far two motivations have been covered security and forgetfulness. This project will also allow for laziness on the part of the homeowner. Specifically the homeowner will no longer need to go around the house opening and closing windows. The window control system will also serve as a way to control all the windows at once from a local or remote location. Furthermore the homeowner will be able to set personal preferences, such as the temperature inside the house and the maximum wind speed through the house when the windows are open. The user will be able to set the outside temperature range at which the air conditioner shuts off and the windows open. For example, one user's preferences might be: its 65F and sunny. It's a beautiful day. The windows should be open and the air off. On the other hand if the day turns dark and starts to rain, the windows should close. This will be controlled via the humidity levels in the air.

In implementing these several things the common homeowner will be able to feel more secure about their home, relieve some of the stress of remembering to lock everything

every time, and have the ease of controlling all windows at once. Thus this project satisfies all three common human characteristics mentioned previously, the need to feel secure, the unavoidable bout of memory, and laziness.

1.6 Project Management

This project shall consist of researching, designing, implementing, and testing a web based home monitoring system. The team consists of four members and parts of the project will be broken up evenly among the four team members. Members were assigned parts of the system that they were in charge of documenting about, throughout the whole paper. Each member was assigned the following subsystems.

John Carver – Research, design, and testing of window motor. Research, design, and testing of graphical user interface. Research of possible programming language to use. Documentation of safety issues and procedures.

Jason Heintz – Documentation of project management, budget, and milestones. Research of possible system communication; between Ethernet and wireless technology. Research, design, and testing of system's different sensors. Research, design, and testing of system's server.

Dennis Seda – Documentation of project overview, and parts acquisition. Documentation of specifications and requirements of the system's door lock and sensors. Research of possible system design, between FPGA and microcontrollers. Design of circuit card assembly. Documentation of system's possible market integration, and overall integration of entire system.

Sean Willis - Documentation of overall project motivation and summary of lessons learned. Documentation of specifications and requirements of the system's power and circuit card assembly. Research, design, and testing of system's door lock/solenoid and power.

1.7 Similar Projects

There are many senior design projects that are similar in many different ways. Any design comes from an idea that was either seen or imagined, but not all ideas are completely original. Some projects come from an original idea that may need some sort of improvement addition to it. One project that is similar to a small portion of this system is the "Rain Detection System for Power Windows in Automobiles" [1]. This project has an automated window system that shuts the windows in the car whenever it starts raining outside. The group decided that having a home window automated system would make the efficiency in the power consumption from the AC system lower which would lower the electricity bills. The rain detection system for the automobile will be similar to that of the home, although the home windows will have an additional temperature sensor on the inside and outside of the home. [1]

Another similar project is the "Cell Phone Controlled House Automation" [1], which is located on the same website as that in the paragraph above. This project is based on a home computer that can take in a command through a text message and apply that command to a home security system or a light within the home. One could turn on and off the security in their home through the use of a cell phone. With this idea in mind the group came up with a website that lets the user access a layout of their home, which shows door and window status and controls, from any computer with an internet connection. Similar to the "Cell Phone Controlled House Automation", the WBMS will be implemented through the use of a home centralized unit. This unit, whether it is a computer or a FPGA board, will send out signals to other components of the home to complete a task. With both of these projects anyone will be able to access their home from an external location and complete necessary tasks. [1]

For any and every project a similar project can be found that either gave the designers an idea or a solution to a problem, or was made without any knowledge of the other. An idea is usually sparked by finding need and then figuring out how to solve that need. Multiple people can find the same need for different functions or solve that need in a different way. There are multiple projects that have different aspects of our project implemented in them. A few more of these projects are the "Automatic Door Lock System" [2], and "Internet Accessible Home Control and Monitoring System" [3], which are both home security and access systems. Besides these, there are many more projects that have similar traits and can be found all over the internet.

2 Specifications and Requirements

2.1 Door Lock

The door and lock component of the home monitoring system shall consist of several smaller parts. The door will be placed in a door frame. The frame will be an anchor for the door which will be connected to hinges. The hinges will allow the door to rotate back and forth. The door should be able to rotate a full ninety degrees while on the hinges of the door frame. The door frame shall be composed of wood. Wood is easy to build with and inexpensive to purchase. Metal on the other hand is more expensive to buy in large quantities and cannot be easily shaped, unless the metal is heated to a high temperature. The worst case scenario that the group will have to deal with when using wood will be terminates and possibly extreme weather. However, this issue can be avoided if the group decides to purchase pressure treated wood. Given the fact that most door frames are made of wood this decision makes sense, as it will simulate the real world better than a metal frame. The door frame shall not exceed the dimensions of three feet wide and four feet tall. Each side of the door frame shall not exceed two and a half inches in length. The door shall not exceed thirty – one inches in width. Also, the door shall not be longer than forty – five inches in length. These specifications will minimize any unoccupied space between the door frame and the door itself. The door knob will be measured from the point where the door frame comes in contact with the ground and shall not be more than two feet from the ground. The door knob shall not be greater than an inch from the edge of the door. The door knob when measured from the center will not exceed one inch in

radius. So in total, the door knob center shall not be greater than two inches from the edge of the door. This specification makes the door large enough for the eventual final presentation. Another factor is that the use of a smaller door means less money to pay for the materials.

The door knob shall need to fit within a two inch diameter hole as to meet the specifications for the door. The door knob shall be of a metallic material that is not electrically conductive. The door knob will be made of either bronze or nickel. The material chosen will not be as critical as the ability of the door knob to meet the design specifications of the door. This is a requirement to meet the specifications of the most common door knobs in manufacturing for homes at this time. As a precaution of the system the door will be able to be opened, after being unlocked by key. The door locking system shall be spring loaded. The door locking system shall contain a deadbolt. The system will activate the deadbolt driver within 20ms of receiving the lock/unlock command. The door locking system will contain a solenoid. The solenoid will require continuous power for it to function effectively. The solenoid shall receive continuous power from the closed circuit assembly (CCA). The solenoid will move the deadbolt into the commanded position (locked/unlocked) within 500ms of receiving the correct driving voltage and current from the CCA. The solenoid type will be a push type. The door locking system shall not require greater than 12 volts to operate the system.

2.2 Sensors

2.2.1 Temperature Sensor

The home monitoring system will have a set of temperature sensors. A temperature sensor will be placed on one side of the window, while the other temperature sensor will be placed on the other side of the window. The purpose of using two temperature sensors versus one is to compare the difference in temperature between the outside of the home and inside the home. The system will monitor the internal and external temperature, taking samples every two seconds. The system will open the windows when any of the following conditions are true in Table 2.2a.

Table 2.2a – Window Open Conditions

1	70° F ≤ Inside temp & Outside temp ≤ 77° F
2	Inside temp > 78 & Outside temp < Inside temp – 3
3	Inside temp < 69 & Outside temp > Inside temp + 3

The system will close the windows if all of the conditions in Table 2.2a are not met. The temperature sensing range should be between -50°C and 120°C. This temperature range should be acceptable for meeting the previous specification as the temperatures given in Fahrenheit meet the range of the sensors given in Celsius. The resistance in the sensor should range between 100 ohms and 1kohm depending on the temperature sensor chosen for the final design. The temperature sensor should be resistance temperature detectors

(RTD). The manufacturer of the temperature sensor will be chosen based on the temperature sensor which bests meets the above design specifications. The manufacturer will not be chosen based on prestige. The temperature sensors should have a maximum operating temperature of between 200°C and 300°C. The operating temperature of the sensors is not a critical specification in this situation. The sensors will not be used for extreme conditions. The temperature sensors will need to be able to transmit a digital or analog signal. The CCA will need to be able to interpret the signal sent from the temperature sensors. The data received by the CCA from the temperature sensors will be retransmitted to the host server. The host server will then display to the homeowner's webpage the real time information received from the CCA. The temperature sensors will be able to interpret a signal from the CCA. The signal from the CCA will be used by the temperature sensors as a means to specify when to open and close the window. The temperature sensor should not interfere with the chain system of the window. For example, a wire from the temperature sensors should not be able to be caught up under the window. The window will lift up within 15 seconds. The temperature sensors will not be noticed by the average passerby. This specification is a means of keeping the system esthetically pleasing to primary the user. In the given scenario that a temperature sensor has to be replaced, a temperature sensor should be replaceable. The homeowner should be able to replace the temperature sensors by themselves and rewire the temperature sensor correctly.

If the system were to be developed into a marketable product, the wiring for the sensors would be run through the home. If this product became marketable, the temperature sensors would need to be able to interpret a signal in case there was a fire inside the home. The temperature sensors would then need to transmit the emergency signal to the nearest proper authorities.

2.2.2 Humidity Sensor

The home monitoring system will have humidity sensors on the window. The difference between the humidity sensors and the temperature sensors with respect to where they are placed, the humidity sensors will be placed on the outside of the window. The team feels there is no necessity to worry about if there is a level of humidity inside the home. The group relates humidity to the amount of water vapor in the air at the time of measurement. The system will close the windows if the humidity rises above 75%. As a result of the above system specification the group believes the humidity sensors should have a range of 0% to 100% with regards to measuring humidity. The developers believe this is an acceptable specification to assume it is going to rain outside the immediate proximity of the home. The sensing accuracy of the humidity sensors should be approximately 3%. This specification is about the average functionality of most humidity sensors. Obviously, home owners want the sensors to be as accurate as possible. However, it would be difficult for the developers to find humidity sensors with less than 2% sensing error accuracy. The ideal humidity sensor will have a response time of at least 30 seconds. This amount of time would give the system plenty of time to react and make the correct decision. The only possible downside is if it begins to rain very intensely and quickly, then the system would still react in approximately no more than 30

seconds. This may result in some personal property damage as a result of the system's response time. The operating temperature of the humidity sensors should be between -40°C and 85°C. Similar to the temperature sensors, the team is assuming the home owners are not living in conditions which meet the extremes of the operating temperature for the sensors. In regard to the preferred manufacturer, there really is no preference. The previous idea with the temperature sensors is the same with the humidity sensors now. The group will choose the humidity sensors which best meet the technical specification. If a manufactures device meets those specifications then their product will be chosen.

The humidity sensors will have to meet more rigorous requirements when compared with the temperature sensors. It would be ideal for the team to be able to test the humidity sensors during the rainy season here in Florida. However, given the timeline for the project this event may or may not be possible. So, the strategy to test the effectiveness of the humidity sensors will be kept simple. The idea is to pour water over the sensors after the project's completion to see if there will be a reaction by the monitoring system. This idea is good and bad at the same time. There is a possibility the sensors will be damaged or destroyed during the performance of this test. This effect would result in increase man hours toward the completion of the project. On the other hand, if the system functions correctly meaning the window for the prototype closes as specified above, then an objective of the project would have been meet. In this situation this test is the most extreme scenario these sensors would have to endure. To prove the project meets the standards the developers, equipment must be diligent tested. Successful testing of the equipment will prove in the final presentation to the confidence the group has in the project which was completed.

2.2.3 Window Sensor

A motion sensor will be connected to the window in the home monitoring system. The purpose of the motion sensor will be to detect motion in the window when the window has been activated. As the team develops the prototype, there will be a necessity to communicate with the homeowners' website information regarding the status of the window's motion. So, these sensors will give the homeowners real time information about the status of the window. In the long term this addition to the system is important toward making sure the system is getting regular maintenance. Once this part of the system has been fully implemented it will be easier to deal with mechanical issues of the system. Before this component can be integrated into the design of the prototype there are some specifications which need to be mentioned.

One of the specifications which is needed for this part is the sensing distance of the sensor. The motion sensors range in their sensing distance accuracy from a range of 2m to 10m. In the English measuring system this breaks down to between 6 and 32 feet. In the case of this prototype a large range sensing capability will not be necessary. The reason for this logic is the motion sensor will be within close proximity to the window. The best fit component to meet the requirement for the sensing range is a part which has a low range. A motion sensor with a range of 2m or 6 feet is adequate for the development of the prototype. It would be better if possible to find a motion sensor with

a smaller sensing range. The theory behind this logic is the smaller the range for the motion sensor the less cost to the producers who uses the device. Now the motion sensors can transmit their signal in either a digital or analog signal. The format is not critical at this phase of the design, because a final component has not been decided upon by the team for the CCA.

At this time, the team has decided the CCA will implement an FPGA. The reason for choosing the FPGA will be discussed in another section. So the ultimate decision will be based upon what the architecture of the FPGA is and how well the motion sensors fit into this design. Now the motion sensors available for the prototype have an output voltage ranging in from 2V to 15V. The signal which is transmitted by the sensors is an electrical signal which must be converted by the CCA in order to be transmitted to the server. So, the motion sensor must meet the requirements for the CCA and what the CCA can handle from the motion sensors in terms of the electrical output. One of the problems which the team will have to solve in the near future will be the output voltage requirement for all of the sensors and not just the motion sensor. This information will be based upon what the final decision in terms of the FPGA which will be used for the prototype. The information from the FPGA will be used as a point of reference as to what the appropriate value will be for the group to put for the output voltage in the motion sensor. Part of the reason this information is to avoid potential safety issues in regard to miscalculating electrical output and burning out devices. The team wants to make sure the components are safe for human use. In the case of whether this device can go to market this is a legitimate concern.

2.3 Window Motor

The window and motor have to be combined in way so that the window doesn't jam in the frame while the motor is pulling it up or lowering it down. The sliding window has to contain a few components on it so that this does not occur. The motor also needs to be fine tuned so that it moves the window to the height it needs to be at so that it does not go too far up or down.

The window has a few components that need to be checked and made sure that it will flow properly. It has to have a smooth track so that it can easily go from the open position to the closed position. If it is a vertical window that slides up and down, then the sides of the window need to be able to move fluidly so window won't tilt and jam. If the window was to jam then it may have an effect on motor, creating problems, and could cause damage to any of the components. The group is going to want to make sure that the window has enough space between it and the frame so it will not jam. The window must also be easy to open and close. This will help to take some of the tension off of the motor so that it does not have to consume more energy than needed to open or close the window. The window must be able to fully close and open so that the temperature inside the house could be affected accordingly. This means that when it is colder outside than it is inside and the user wishes for the house to cool down, the window should be able to automatically open enough to let the cool breeze in and change the inside temperature, if only by a little bit. To assist with this aspect the window will have to at least have a foot

of free area when it is in the open position so that enough air will be able to get in to affect the temperature inside the house.

The motor aspect to this portion of the project is essential. The motor should be powerful enough to be able to lift the window off the ledge and into the proper open position. The set up for the motor/motors should also allow the window to completely close. This means that either the motor has a release so that the window can close by its own weight, or there is one motor that has a reverse setting on it to lower the window. Another way is to have two motors so that one can be used to open the window and another can be used to close it. The motor must also be electric so that the group can attach it to a power source which is connected to a circuit board. This is because the group needs to be able to power it by a push of a button or a command given to it by the system. The size of the motor needs to be small enough in diameter to fit inside a wall; in other words it has to be smaller (in diameter) than the frame of the window. The motor must also have enough torque so that it can lift the window without having to run at a high rate of speed or to perform with a high amount of energy consumption. Having a higher amount of torque in the motor will allow the window to open and close at a slower rate and with more of a chance of opening all the way. If the motor were to have not enough torque then it may just jam and not lift the window at all or may stop when the window is only half open. The motor needs enough torque or the window has to have a stopping mechanism so that when the window is fully open and the motor has no power applied to it, it can stay in the open position and not close at the wrong time. It needs to have a place where the group can attach it to the frame of the window or to a stud in the wall so that it does not rotate around itself instead of lifting the window. It must also have either a pulley system setup or a dowel sticking out of the center of it for which the group can attach a gear on the center of the dowel.

2.4 Power

This project requires several types of power. The Circuit Card Assembly (CCA) will have a section acting as the Power Distribution Unit (PDU). The PDU will be provided with 120V ac. It will convert, regulate, and supply all voltages required by the system. It shall be capable of providing 12V ± .25V at .5A min continuously. This will supply all other voltage regulators as well as the level translator. The level translator suggests that the 12V input be between 11.75V and 12.25V for normal operations. It should require 50mA max. The PDU will also be capable if sourcing 12V ± .5V at 3A min for a period of 500ms without interrupting the functions of the rest of the circuit. This will supply the solenoids. There will be another power supply for the window motors. This will need to be capable of driving 3.3V at 2A without interrupting the functions of the rest of the circuit.

For the functionality of the IC chips on the CCA several other voltages are required. The analog to digital converters will require 5V Vcc inputs. It is suggested that the Vcc be within .25V of the nominal Vcc voltage. The FPGA requires 1.2V VCC and will accept 1.2V for the I/O lines. This voltage must be between 1.14V and 1.26V for normal operations. The Icc for the FPGA is 21mA max (at 1.2V). The 1.2V supplied to the I/O

lines should be capable of driving 6.4mA per bank. The FPGA also tales in 3.3V for Vcc_aux and Vcc_pll. 3.3V is also accepted for the I/O lines. This voltage must be between 3.135V and 3.465V for normal operation. Icc_aux for the FPGA is 74mA max (at 3.3V). The Icc_pll is 1.8mA (at 3.3V) per PLL. There will be a USB interface IC. This will require 3.3V as the input. However it does not require as tight a range as the FPGA. It requires a Vcc from 2.7V to 5.5V. This allows for the use of the 5V supply or the 3.3V supply. It was decided that the 3.3V supply would be more appropriate as it is has more room for error. The USB interface IC draws 50mA max (at 3.3V). There will be 2 ADCs. Both will require a Vcc of 5V. It is recommended to be between 4.75V and 5.25V. Each will draw a maximum of 50mA (at 5V). A table of components and their respective voltage and current draws can be seen below, Table 2.4a.

Table 2.4a - Component Power Requirements

Component	Voltage	Current
FPGA	3.3V	27.4mA
FPGA	1.2V	76.8mA
ADC	5V	50mA
USB Interface	3.3V	50mA
Level Translator	3.3V	25mA
Level Translator	12V	50mA

A voltage regulator will be used to drop 12V to 5V. Another voltage regulator will be used to drop 12V to 3.3V. The last voltage regulator will be used to drop 3.3V to 1.2V. The 1.2V supply will need to be capable of sourcing 100mA min. The 3.3V supply will need to be capable of sourcing 200mA min. Lastly the 5V supply will need to be capable of sourcing 400mA. The required voltages and their total respective current levels for the CCA can be seen in the table below, Table 2.4b.

Table 2.4b - Total Power Requirements

Voltage	Current
12 ± 0.5	3A
3.3 ± 0.5	2A
12 ± 0.25	429.2mA
5 ± 0.25	50mA
3.3 ± 0.165	202.4mA

2.5 Circuit Card Assembly & Enclosure

The CCA will be a two layer board. The bottom layer will be a ground plane. This will be done for convenience as well as for electrical purposes. Using a ground plane will ensure that all the components have the same reference. The CCA will use 1oz copper which is common and cost efficient. The exception is the ground plane which will use 3oz copper. The power signals will use 10mil traces with the exception of 12VDC #2 and 3.3VDC #2 which will need at least 20mil traces. Because of this, all components that require 12VDC #2 and 3.3VDC #2 will be placed as close to the voltage regulator as possible. This will not only save space on the board but will also reduce the voltage drop through the CCA. All other signals will use 8mil traces as the current draw for each is minimal and 8mils is the minimum the manufacturer can guarantee. The max current recommended for a 1mil traced with 1oz copper is 83.5mA.1 All other signals should fall well within this maximum therefore the CCA is being designed with 8 times de-rating. All of the signals and power going into or coming out of the board will do so through connectors. The main power will be supplied through a DB-9 male on the CCA. The door and window signals will go through a DB-9 female on the CCA. These include the drive unlock for the door lock, the drive lock for the door lock, the sensor for the position of the door lock, the drive up for the window, the drive down for the window, the closed sense for the window, and the open sense for the window. The CCA will need a second DB-9 for the temperature sensors and moisture sensors. This will provide power to the sensors and include the communication lines. The CCA will have a USB jack for communication to the computer. It will have a JTAG connector for programming/updating the FPGA.[40]

2.6 Safety

Every aspect of the project has to abide by safety precautions for the design. The Underwriters Laboratories (UL) has specific safety measures that need to be taken into consideration when designing a project like this. UL is the standard for safety procedures and certifications for all types of products and components. The safety standards that they use are to protect everyday living for people in all types of environments. UL safety code provides the group with standards in which they should operate and run their system. One example of this is through fire safety with circuits and wiring.

The circuits need to be under a controlled status. According to the UL website, the circuit board should not provide any sparks that could cause an ignition of any type of flammable material nor should reach any temperatures in which a material could catch on fire. This is a fire safety precaution that needs to be taken very seriously because if two components that are close enough to each other to create an electric arc, then different materials would have a good chance of catching on fire. To prevent this, the circuit board needs to be contained in a properly enclosed case that will prevent any outside materials to catch on fire due to any internal problems. If the circuit board is in an environment in which there is a chance of flammable gasses catching on fire, the circuit board should be enclosed in an airtight case that will prevent this. If the circuit board does not have a casing to protect the outside elements from catching on fire in normal conditions, the board should not be capable of creating a spark or enough heat to create a fire. If the

circuit board is enclosed within an airtight case, the case should be able to control the internal pressure so that if the gases within it start to expand it does not have a chance of exploding. The UL website says that the enclosures should also be created so no dust particles will be able to enter the casing. When implemented into a home scenario, the entire system should contain AFICs (Arc Fault Circuit Interrupters) to prevent fires that are produced from electric wiring. The wiring should be covered so that it does not create any sparks that could ignite the insulation within the walls. According to the CPSC (Consumer Product Safety Commission) over 40,000 home fires every year occur because of the problems within the home wiring. This is why they recommend the AFICs for a new home electric safety device. Arc Fault Circuit Interrupters have a good impact on the fire safety aspect of the circuit board and of the wiring within the house, but there is another matter to be concerned with when dealing with electric wiring and circuits. [14]

The UL website states that three hundred electrocutions happen each year within homes in the United States. These electrocutions can be diminished by adding GFCIs within the home for the wiring throughout the house. GFCIs stand for Ground Fault Circuit Interrupters which protect against a person grounding a circuit. This helps with faulty wiring which could create an electric charge which a person might touch while grounded. The current will pass through the person to the ground and electrocute them inside their home. The UL website states that the GFCIs can prevent about two thirds of the three hundred electrocutions which go on each year. The most common ground fault circuit interrupters that can be found are on nearly all wall outlets that are inside houses and newer buildings. The ground fault circuit interrupters can also be found equipped in a home circuit breaker. The ground fault circuit interrupters are important protectors that every home should contain for overall safety. [15]

The external elements of the circuit board also need to abide by safety features. The temperature sensors which attach to the circuit board need to be extended to the outside of the house to be able to read the outside temperature. The wiring needs to have a rubber casing which will protect the circuit board from shorting. This will also protect the wiring from any damage that could happen because of the outside environment. This includes water damage, corroding, rust, and so on. It also will protect the outside environment from chances of being electrocuted or cause a fire safety hazard. The temperature sensor for the inside of the house should also have the same rubber protection because if not, the wiring will be exposed and could cause a danger to the people inside the house and would also become a fire safety hazard. The actual sensors should also have a protective coating over them so that they do not cause or acquire any external hazards.

The humidity sensor needs safety features to it as well because it has to deal with the outside elements. The humidity sensor will be placed outside the house at a position in which it can accurately sense the humidity outside. The sensor needs to be well protected from the elements because it needs to be able to tell if it is raining so that it can accurately send back information to the circuit board. This means the sensor will be constantly surrounded by rain and heat which can ruin the sensor or the elements

connected to it. The sensor cannot have external wiring that could cause a fire or an electric arc because the rain could enable the arc to kill the power or electrocute someone if not properly attended to. With the amount of weather that the sensor will endure, the protection for it has to be reliable for the length of time it is outside. It should be well protected from the rain but able to detect it quickly and safely.

Another safety component which needs a good deal of attention is the motor. The motor will be connected to the circuit board to receive its power. The power to the motor is going to be higher than that needed to power the sensors, so it needs a stronger/thicker wire to allow the power to flow through it. The wire should be wrapped in a rubber casing to ensure that there are no breakpoints which could catch the insulation on fire. The wires need to run all the way to the motor which needs to be protected where the wires connect to it so the connection point cannot break off or arc and create a fire. The components within the motor also need to be enclosed in a casing because they can cause a small spark which has a chance of starting a fire. The components should have a casing which surrounds the entire motor besides the rotating shaft which sticks out of it. The motor also needs to be separated from the insulation within the wall. This is because the motor can cause heat which will give the insulation around it a chance to catch on fire. This can be a big concern which needs to be prevented. The motor has to maintain a temperature which cannot cause the wood frames to catch on fire. The motor should be raised off the frame enough to allow air to get between it and the surrounding elements. The shaft of the motor, and the rod that is connected to it (if one is used), has to maintain a safe distance away from elements within the wall which could be flammable. This is because if the shaft is rotating at a steady and fast enough pace, it could cause enough friction against another object to create a fire. The rod (if used) is also connected to a support which needs a bearing which will prevent friction between the rod and its support.

The components within the front door that lock and unlock it need to have safety components to them. The front door is a key component to this system and needs to be implemented properly. There will be electrical components within the door itself which need power to them. The wiring to the door has to have a thick rubber casing over them so that they don't tear as easily. The wiring that is going through the door frame and into the back of the door will be a weak spot in the wiring. If the wiring properly installed it will have a rubber inserts inside the holes in which they are exiting the frame and entering the door. This will prevent the rubber casing over the wire from pealing back when opening and shutting the door. If there was no casing over the wiring then there would be a higher chance of someone getting shocked because of the exposed wiring that could be touching other metal components of the door. This could also create an arc with the hinges on the door and could cause a fire. The power going to the door also needs to be strong enough to power a solenoid. The wire should be an 18-20 gage wire so that it can produce enough current to drive the solenoid. It also needs a casing that can make sure that the wiring does not touch any external elements for safety. The solenoid needs to be away from dust or insulation. This is because the solenoid has a possibility of heating up with too much continuous use and could cause a fire. The solenoid should be enclosed in a case that will prevent any external elements to get inside and cause a fire. It

should also prevent any elements inside from touching any metal elements within the door that can create a shock to one of the users. The connections between the wiring and the solenoid and other components within the door need to be covered properly so that they are not exposed. There is also going to be a solenoid within the wall that will cause the door to unlock. This solenoid needs to be protected from the wall insulation so that it does not cause a safety hazard. The solenoid also needs to have a rubber cover over the drive shaft so that if, for any chance, the shaft creates a charge no one will get hurt or electrocuted from it.

The other safety feature is the reliability of the system. The solenoid within the door frame cannot stay in the on/ push position all the time. This will cause the door to stay unlocked even if the other solenoid is trying to push the deadbolt into the locked position. The solenoid within the door frame needs to be easily pulled back when there is no power applied to it so that the deadbolt can fully extend into the hole. The power source that is going to both of the solenoids needs to be a reliable source so that power surges will not cause one of the solenoids to unlock the door. The solenoid within the door needs to be properly welded to the back of the deadbolt so that when the solenoid is driven into the deadbolt, it does not miss the back of it. This will provide a more reliable locking mechanism so that the house stays locked and safe.

Probably the most important feature to this project is the website and the server controlling it. This website needs to have high safety features so that the information contained on it can be secure. The website will contain the ability to access the home from an external location which will give the users an advantage of controlling their home but from a secure location. The website must have a security page that will only allow the home owner access their home information. The first page that they enter should be the home page where the user can access the login page and will have to give their information. To keep the website as secure as possible the login page will need to have an area for the user name and for a password. The homeowner must know their information to enter the website. This login page is pertinent for their webpage to provide them safety from other people who may wish to break into their home. Since the website will have the ability to unlock their doors, the security on the website must be stable. The C# and html programming will allow the programmer to set the specifications of security to meet a high performance. The programmer will be designing all different classes, methods, and variables which will be used and viewed through the website. This information has to be maintained in a safe state so that outside users or classes cannot see the information within the program without the correct access rights. The classes that the user will be dealing with will be private or protected so that outside sources cannot view them. The methods and variables within these classes will also be private unless otherwise needed by the main class. This privacy is important to maintain the security and safety of the system and the elements that are contained within it. Both the home system and the website need to be highly protected for the owner's safety.

3 Research

3.1 Door Lock

In researching door locks and possible methods of electronically controlling them, several solutions quickly became apparent, however only one met our specifications completely. A retailer offers an electronic deadbolt almost exactly as described in the project definition. Item 1828 from Nokey.com is said item. The main problem with this solution is the price was decided to be too high. Specifically it is $139.00. The other problem with this is it is RF controlled. This would require incorporating RF circuitry into the circuit. Lastly it requires four AA batteries. This is not what is desired based on the project description. The goal of the door lock is to be driven electrically based on house power, not from battery power. Battery power would require replacing the batteries thus costing the consumer repetitively.

Another site offers something similar. Keylesspro.com offers item KF-01P which is a remote control deadbolt. Like the previous option the price was deemed to be well over the budget. It costs $74.95. This deadbolt uses 4 AA batteries similar to the previous option. This is undesirable for the same reasons. This solution has audible tones for lock, unlock, jam, and low battery situations. Nevertheless this product was proved impractical because it uses infrared technology. This requires the remote to be within three feet in front of the lock. This is impractical for the solution because the CCA will be inside the wall and thus infrared will not work. This same site offers a RF version of the same lock for $10 more. However it was overlooked for the previously mentioned reasons.

Another option that was considered was using a heavy duty solenoid as the deadbolt. This would mean needing to find a way to integrate a key however. The solenoid would need to have a continuous duty cycle. It would have to be “Fail Safe”. That is to say, it would need to disengage when power is removed. This is a safety concern because if it were not Fail Safe, it would not prevent the user or homeowner to be locked in or out of the home during a power outage. One available instance of this is the SDC 180. It is a surface mount electric deadbolt. It has a half inch diameter bolt. The stroke is one half inch as well. This is not as much as a normal DIY deadbolt. However it is acceptable. It draws .9A at 12V. This would be well within the circuitry designed for the PDU. However the fact that the power draw is continuous instead of a pulse would need to be taken into account. This would mainly show in the form of heat on the CCA. The PDU was designed such that it is capable of sourcing 12V at 2.4A which will be more than satisfy the requirements of this part. However the PDU was designed for this level of current draw to be for 500ms, not continuous. There are no heat sinks on the voltage regulators or on the components that would be handling the current. The other main problem with the SDC 180 is the overall size. It is 6.75” by 2” by 2”. This means that it would not fit inside the door. It would have to be placed in the wall and the strike plate would have to be in the door. Which is not overly problematic, however it does require that the wall be hollowed out such that it can fit inside and be mounted. The wall would need to be at least three inches thick for this to be possible.

There is another version which is very similar. It is the SDC 110. It is cylindrical 1 3/8" diameter by 4" long. As such it would be able to fit inside the door. This would not require hollowing out as much as the SDC 180 would. The SDC 110 requires the same voltage and current draw. As such, it would cause the same heating problems with the PDU. Because this is a Fail Safe solution when the power is removed, the door would be unlocked. This reduces the safety of the home. During a storm if the power goes out, the door unlocks despite what the homeowner wishes. Furthermore all a thief would have to do to enter the home is cut the power. As previously stated, the homeowner should still be able to use a key to enter/exit the home. This has no manual override. Thus a key solution would have to be designed. The easiest way to do this would be a lock attached to a sensor inside the door. When the key is turned one way the circuit drives the deadbolt to a locked position. When the key is turned the other way the circuit drives the deadbolt to an unlocked position. In this case, the circuit would either apply or remove power to the deadbolt. However, this would require extra sensors, circuitry, and money. Both of the electric deadbolts, SDC 180 and the SDC 110, were determined to be outside of the target price range.

The last solution considered was a standard DIY deadbolt. This is by far the most cost effective solution. A simple one (Kwikset 660 single cylinder deadbolt) can be purchased at Home Depot for $12.97. The advantage to this is that there are no predesigned requirements to conform to in terms of electrical control. That being said, the deadbolt still must be controlled and driven into its two states. The simple DIY deadbolt allows two options for driving it. The main method of driving the deadbolt is the same way the key drives it. There is a shaft going through the deadbolt which the key is attached to. This shaft turns 90° clockwise to disengage the lock. Alternately it turns 90° counterclockwise to engage the clock. The driving mechanism could attach to this shaft that is already there to drive the lock. Another option is more direct. The deadbolt could be driven via an external force on the bolt itself. The main drawback to this approach is that the deadbolt has an internal safety mechanism that prevents it from being driven externally. This mechanism would need to be overcome in order to use this approach. The final decision on the door lock was to use the Kwikset 660 single cylinder deadbolt. This is because of cost restrictions and impracticalities on the other options.

The door will need power for the sensor for the door lock and for the solenoid that will drive it. There are several ways getting power to the door. One method investigated was running wires to the door frame where there would conductive plates. Another set of the conductive plates would be on the door itself. Wires would run from these plates on the door to the deadbolt and solenoid. This is possible to do but may not be the best solution. First the conductive plates would be exposed to the homeowner whenever they have the door open. If the CCA tries to drive the solenoid during this time, 12VDC at 2.4A would be accessible to touch on the wall's conductive plates. This is a major safety concern. Secondly this proves complicated because it would increase the resistance on the driving lines and therefore increase the line loss. This is highly undesirable. The third reason conductive plates were overlooked was because of the sensor lines. Driving the solenoid requires two plates. Reading the sensors in the door may more than double that requirement. Thus there would need to be four to five plates between the door and

doorframe. Two of them would be of moderate current. The other problem with this approach is it does not allow for continuous reading or the lock sensor. When the door is open the sensor is essentially disconnected. This means that for part of the time, the lines for this sensor are left floating. This could be solved with pull down resistors on the CCA, however the signal would still be connected and disconnected every time the door opens or closes.

The other option investigated is running wires all the way from the CCA to the solenoid and door lock. To resolve the problem of getting the power across the gap from the door frame to the door itself, a stranded shielded twisted pair of wires would be run. They would come out of the wall near the top of the door above the topmost hinge and leaving enough space for the door to swing fully open, run into the door at a location horizontally level with the one from which they left the wall.

3.2 Sensors

3.2.1 Temperature Sensor

Along with all of the other features of this system to try and improve the home, it was decided that there should be a system to try and regulate the inside temperature of the home. The group decided to implement an automatic window that could be triggered either automatically or by the user. Now, in order for this system to automatically open and close the window the system has to be able to know temperatures inside and outside the home. If the user decides to open or close the window through the graphical user interface, then there is no need for the system to use the temperature readings. In order for the system to regulate the temperature automatically the system must have two temperature sensors. There will be a temperature sensor located inside the home, and also a second temperature sensor located outside the home.

In order for the system to operate efficiently it will need temperature sensors that have certain characteristics. First, the temperature sensors must be affordable and generalized. This is possible because nothing else will be needed from these sensors except for the current temperature. Second, the temperature sensors must be able to be mounted on a printed circuit board. It will be much easier and more organized to have a sensor that is able to be directly mounted onto the circuit board, rather than having a separate unit that is wired to the circuit board. The temperature sensor must also be able to be powered by our specified voltage range. And the sensor must be able to have input for a probe to be attached. This is not as important for the temperature sensor located inside the house, but for the temperature reading for the outside the system will have a probe running from the sensor, located on the printed circuit, to the outside of the house. The way in which the temperature is measured and reported is not of great concern. The group has determined that however the temperature is returned, either in Celsius or Fahrenheit, the system will convert it as necessary.

From some research several different types of sensors were found, ranging from several dollars to over a hundred dollars. Two temperature sensors were selected to further

research for a final decision. The first temperature sensor is the DS1822 Econo 1-Wire Digital Thermometer from Dallas Semiconductor and the second temperature sensor chosen is the LM19 Temperature Sensor from National Semiconductor. The DS1822 digital thermometer is unique because it only requires one line for interface. This means that the chip only requires one port for communication to the system. This eight bit temperature sensor converts the temperature reading to 12-bit digital word that is then transmitted to the system. Its temperature range is from -10° C to +85° C, with a plus or minus 2° C accuracy in the temperature range of -10°C to +85°C. Another unique feature of this sensor is that it draws its power for the data line only, needing just another port for the ground connection. This feature helpful because it eliminates the need for an external power supply, the device requires power in the range from 3.0 V to 5.5 V. [18]

The second temperature sensor is the LM19 from National Semiconductor. The LM19 is an analog output CMOS temperature sensor. CMOS stands for complementary metal–oxide–semiconductor, which simply just refers to the way in which the integrated circuit is made. A positive quality of a CMOS chip is that they are generally low static power consumption devices. This particular CMOS chip operates in a power range of +2.4 V to +5.5 V. This temperature sensor operates in the temperature range of -55° C to 130° C. The sensors accuracy is at about plus or minus 2.5° C, but that decreases as you approach the temperature range extremes where the accuracy can decrease to plus or minus 3.5° C to plus or minus 3.8° C. [19]

3.2.2 Humidity Sensor

Having this home monitoring system able to automatically try to regulate the temperature inside the home is a great feature. But with this added feature, there can arise problems with the system. The main and obvious problem that can be seen with the system automatically opening and closing the window, depending on the temperature difference between the inside and outside, is that of rain. Now if a person was at home and wanted to open the window to allow air flow, they would obviously check first to make sure that it was not raining so that nothing inside of the home would get wet. In order for the system to be able to still automatically open and close the window and not allow any rain to get inside, is by implementing a humidity sensor.

The initial design of the system is to implement a humidity temperature that reads the humidity outside of the home and reports back to the system. Now if the system is automatically closing the window due to the temperature too cold inside, then there is no need for the system to know of the humidity outside. This data only becomes important if the system is going to open the window automatically, to try and cool off the inside of the home. The way that the system will use a humidity reading to determine if it is raining is by a threshold. In theory, when it rains there should be a 100% humidity reading, but that is not always the case. There can be rain when there is not 100% humidity, because the 100% humidity reading is in the clouds where the rain is forming. For this case, the system is going to have a humidity threshold that it will monitor and base its actions on. The threshold will be set lower than 100% humidity to be able to read when it is raining and it is not 100% humidity. This lower threshold will also be

beneficial, because it will help keep the window closed when there is fog which will equate to a high humidity reading.

To become fully automated the system will be constantly monitoring the temperature inside and outside of the home. If the difference between the two passes the thresholds set by the user then the system will take actions to help cool off or warm up the inside of the home. Before the system automatically opens the window, it will first request the humidity reading from outside the home. If the humidity reading is above the threshold set, then the system will not open the window. If the humidity reading is below the threshold set, then the system will allow the window to be opened. Whenever the window is open the system will be constantly monitoring the humidity level outside of the home, to determine if it starts to rain. While the window is open, and the system reads a humidity level above the threshold set, then the system determines that it is raining outside, or close to it, and then the system will close the window.

To meet these requirements the humidity sensor will have to have certain characteristics to ensure the effective functioning of the system. The humidity sensor will have be able to operate in the supplied power range. The sensor will also have to be small enough and be able to be integrated into the printed circuit board. Also, the accuracy of the humidity sensor will have to be taken into consideration, because if not accurate enough then the system could be vulnerable to situations where it is raining and the system has the window open. As always cost will be another factor in determining a suitable humidity sensor for the system. From some research, there were several applicable humidity sensors found including the CHIPCAP-D Novasensor sensor, the SHT11 Sensirion sensor, and the SHT71 Sensirion sensor.

The first of the humidity sensors for comparison is the CHIPCAP-D humidity sensor from Novasensor manufacturer. This chip is a dual simultaneous humidity and temperature sensor. This particular sensor is a fourteen pin, surface mount chip. It operates on a supply voltage range of 3.0 V to 5.5 V, with a quiescent current of 0.5 mA at 5 V. The Chipcap-D sensor has the following ranges for humidity and temperature readings: 0 to 100 % humidity, and 0° to 70° C for temperature. It also has the following accuracies for each reading: plus or minus 2% from 20% to 80% humidity and plus or minus 3% for all other areas of the humidity range, and for the temperature accuracy it has a plus or minus 1° C for the entire temperature range. The interesting thing about this chip is the possible outputs allowed, the Chipcap-D sensor has three possible outputs for each sensor reading, humidity and temperature.

The first is an RH Voltage Output (Ratiometric) for the humidity reading, and a Temperature Voltage Output (Ratiometric) for the temperature reading. This output provides a voltage output in correlation to the temperature reading a ratio to the input voltage. The second output is a RH Voltage Output (Linear) for the humidity reading, and a Temperature Voltage Output (Linear) for the temperature reading. This output provides a linear voltage output from 0 to 1 V, based on the humidity and temperature readings. The third output possibility is a RH Digital Output for the humidity reading, and a Temperature Digital Output for the temperature reading. In this output the

humidity reading is transmitted in a 8-bit Manchester encoded format, and the temperature reading is transmitted in a 10-bit Manchester encoded format. If selected this chip would most likely be used in the digital format providing encoded bits to the system to read. [20]

The second and third humidity sensors, the SHT11 and SHT71 Sensirion sensors, are from the same family therefore are fairly similar but have some unique characteristics. Both sensors operate in the same power range of: 2.4 V to 5.5V. Also, both chips communicate with the system on a digital 2-wire interface. The SHT11 has an average power consumption of 150 µW, while the SHT71 has an average power consumption of 90 µW. Both sensors also have the same operating ranges for both humidity and temperature; the humidity range is 0 to 100% RH, and the temperature range is from -40° C to 123.8° C. The accuracies for the SHT11 are also the same as the SHT71 and are; humidity: plus or minus 3% RH, temperature: plus or minus 0.4° C. Also, both chips output in either a 8-bit or 12-bit digital format to the system. The main difference between the two Sensirion sensors is there packaging types. The SHT11 is made in a surface mountable LCC type package. While the SHT71 is made in a single-in-line pin type package. There are advantages and disadvantages to both package types. The surface mountable type package takes less room on a printed circuit board and can be organized better, but it can be difficult to solder to a board. While the single-in-line pin type package uses the old through-hole technique so it is easier to solder to a board, but it therefore is larger and takes more space. [21] [22]

From this research it was determined that the Sensirion SHT11 sensor would be best suitable for this application in the system. The Sensirion chip satisfies both requirements of temperature and humidity monitoring. The SHT11 also is surface mountable which will result in a small more organized printed circuit board. All of the specifications, advantages and disadvantages discussed above and display in Table 3.2.2a below were taken into account when selecting this sensor chip.

Table 3.2.2a - Humidity Sensor Specifications

	CHIPCAP-D	**SHT11**	**SHT71**
Power Range	3.0 V - 5.5 V	2.4 V - 5.5V	2.4 V - 5.5V
Humidity Range	0 - 100%	0 - 100%	0 - 100%
Humidity Accuracy	± 2% for 20% to 80% ± 3% for entire range	± 3% RH	± 3% RH
Temperature Range	0° - 70° C	-40° - 123.8° C	-40° - 123.8° C
Temperature Accuracy	± 1° C	± 0.4° C	± 0.4° C
Output	Voltage Output (Ratiometric or Linear), Digital 8 and 10 bits	Digital 8 or 12 bit	Digital 8 or 12 bit
Package Type	Surface Mount	Surface Mount	Through-hole Pin

3.2.3 Window Sensor

Allowing the system to automatically attempt to regulate the temperature of the inside of the home, by opening and closing the window, is a great feature that can also help save money. But, permitting the system to open and close the window automatically can become a security risk. This is where the requirement for a window sensor was created from, along with the need for the system to be able to know the current state of the window; whether it is opened or closed.

From much research, there are many possible options to determine whether a window is opened or closed. It was found that the main and most utilized method is that of a reed proximity switch. A reed switch is an electrical switch that is powered by the application of a magnetic field. The way that a proximity switch works is actually very simple in design. A metal strip is placed on any part of the window, and then when that window is closed a magnet is placed directly next to the metal strip, on the window frame. When the metal strip is in the close proximity of the magnet, then the switch is held down showing that there is a closed circuit. When there is a closed circuit, a current is sent along the wire which is read by a control box. Most proximity switches are normally open, meaning that when the window is open, or when the metal strip is not near the magnet, then there is no signal being sent along the wires showing an open circuit.

After researching reed proximity switches a few options were found: Ameseco AMS-7, Assemtech PSA240/30. These two proximity switch are very similar in design and differ by only a few characteristics, which are shown below in Table 3.2.3a. Both switches operate with a switching current of 0.5 mA, and they also both have operating temperature ranges that are acceptable for implementation into this project. The main difference between the two switches is their operating distances. Operating distance refers to the maximum distance that is allowed between the magnet and the metal strip for the switch to still operate correctly. The Ameseco switch has an operating distance of 0.75 inches, while the Assemtech switch only has an operating distance of 0.315 inches. From the operating distances and the corresponding prices for each of the reed proximity switches, the Assemtech PSA 240/30 reed proximity switch was chosen for application in this system. [23] [24]

Table 3.2.3a - Proximity Switches

	Switching Current mA	**Operating Distance inches**	**Price**
Ameseco AMS-7	0.5	0.75	$13.99
Assemtech PSA 240/30	0.5	0.315	$5.61

3.3 Window Motor

A vast amount of motors can be found for all different types of mechanical devices. The motor that the group wishes to use is going to help provide a means to open a window through the use of an electronic system. There are many different types of motors that can be used for this project but some have better aspects to them than others. One specification to the motor that has to apply is that it needs to be a DC motor that is small enough to fit into a wall. The motor also has to have enough torque to lift a window and lower it at the same rate. Here are a few motors that have been researched for the use of this project.

The most common motor found for a simple task is the DC Hobby Motor 6-12VDC. This motor can run at a high rpm with a small amount of power. According to sources it has a 1" diameter and is only 1.26" in length with a shaft that sticks out only an extra ½". This means that the motor would be perfect in diameter and length because it would easily fit inside a wall. Although it is a small size it does not have any easily accessible place on it so that the group would be able to attach it to the frame of the window. Another downfall to this motor is that even though it has a high rpm, it has a very low amount of torque. This makes it much more difficult to use this motor because it may not have enough torque to lift the window. Although this motor doesn't have enough torque, the group has the ability of adding a gear box onto it so that the torque will be higher and the rmp will be lower. If the group were to decide on getting this motor it would cost about $3.00 and if they decide to buy a torque box along with it, it will cost about $20.00. [6]

Another motor to take into consideration is the Coreless DC Gearhead MicroMotor. This motor has a 3v rpm rate of 120 and a 6v rpm rate of 236. It is 1 ¾" in length and 5/8" diameter which means that it will easily fit inside the wall. It also has a Max Continuous Torque of 8.5 oz per inch. This may make it more reliable by lifting the window at a steady pace. Though it depends on the weight of the window to know how much torque the motor will need. It also rotates at a slower rate which will make the window raise and lower slower as to not break the frame or glass in the window because of its velocity. Although this motor has a higher torque it has the same down fall as the DC Hobby Motor since it does not have any easily accessible place to screw it down to the frame. This motor only costs $15.00 to buy. [7]

A High Torque Motor is a good choice for lifting heavy objects. The higher the torque the more the motor can lift (the more force that it can produce). One of the High Torque Motors on the Scientifics website has a torque of 65 stall torque (in-oz) which is good for lifting objects. This can be a good thing to have but one has to make sure that the speed of it is equally good. This motor only has a speed of 1 rpm which is not very fast. Even though this motor has a low rpm, the group needs to decide whether or not the motor will run as fast as it should to open the window at a decent pace. The motor is suppose to run at 12v or 3v, depending on the motor with 65 stall torque. If the group ends up getting the motor with the higher voltage then it may make more noise. The motor is supposed to be a very quiet motor, but one of the reviews stated that the motor was not as quiet as

the sellers wanted the buyer to think. Although all of these qualities have their ups and downs, the motor does have an easily accessible place to attach it to the frame to give it support. This is one of the many motors that the Scientifics website offers, though they all provide different ratios of stall torque to speed (rpm's). They have motors that range from 1 rpm with 65 stall torques to 115 rpm with .8 stall torques. These motors can cost about $25.00 each. [8]

The Pittman 6 – 24Vdc Gearhead Motor is an 11.5:1 gear ratio motor. This motor is also found on the Skycraft Parts and Surplus website. The size of the motor is overall about 4.32 inches long and approximately 1.3 inches in diameter. The size, even though bigger than the other motors, should still be small enough to fit inside a wall without any problem. The motor can run from a 6Vdc power source all the way up to a 24Vdc power source. This gives the group more room to play with the amount of voltage that they decide to apply to the motor. The more voltage that the group decides to put into the motor, the more rpm that the motor will produce. The motor will go from a range of 135/1550 rpm with a dc voltage of 6, to a 24Vdc that produces an rpm rate of 550/6630. Allowing the group to have this much give with the amount of rpm that they wish to produce will make the testing process easier and will allow them to fine tune the speed in which they want the window to raise and lower. The motor also has a rated 100 oz/in of continuous torque which should give a good amount of force to lift the window. The overall performance and quality of this motor is very good. Although it does not have an easy access point to attach the motor to a frame, it has two holes in the back where screws can be placed to secure the motor to some type of backing. The price of this motor is about $23.00 at the Skycraft Parts and Surplus store. [9]

The Super Speed 9-18VDC Hobby Motor is supposed to be great for science projects and robotics, says Radio Shack. Their Super Speed motor has 3 different voltage inputs which allow the user to try out different voltages and see the output result for each. The three different voltages that can be used on this motor are a 9V, 12V, and 18V DC power supply. Though there are three different voltages that can be tested, the website does not give any information on how much torque the motor has. Since the motor is called Super Speed, I would assume that the motor has a higher rpm rate and normally when there is a high rpm there is a lower torque. This leads the group into problems because they do not know if the motor will have enough rotational force or not. The specs on the Super Speed motor also show that the body of the motor is made out of plastic. This could lead to problems because if there is a way to attach this motor to a piece of two by four wood there might be an issue with whether or not the force applied to it will break the plastic body. The ratings on this motor were good for the most part, pros being that it was a versatile motor but the cons for the motor were another story. The main reason not to buy the motor was because it was unreliable and that it wears easily, which shows that it would probably not be a motor that could last a long time. [10]

Another good motor to consider is the Miniature Metal Gear Motor -71 RPM. This motor from the Hobby Engineering website is supposed to be a high quality, small motor. This motor is only 29mm by 12mm by 10mm which makes it very easy to place anywhere inside of the wall. Even though the motor may be small it is very sturdy

because of its fully metal gear train which also gives it a longer operating life. This allows it to be a smooth flowing motor that can stay quiet. This motor has a speed of 71rpm while using a 6VDC source. It contains a torque of 30.7 in-oz which would be a good help for lifting objects even though it does not have as much torque as some of the other motors. Since the motor is completely made out of metal the group will not have to worry as much about breaking the motor. Although the motor has a faceplate with mounting holes, it contains threads that only fit M1.7 machine screws which could become annoying because of not having the right screws for it. This could also become a problem because the screws have to be a good length to be able to fit through a two by four beam or a stand of some sort. The motor also only contains one DC voltage input which could become a problem when the group decides to test the motor. If the motor goes too fast and the group decides that they wish to slow it down, then it may become more difficult because of the single voltage input. This motor all together costs about $20.00 on the Hobby Engineering website. [11]

The Miniature Gear Motor: Right Angle Shaft is another motor that is on the Hobby Engineering website. This motor is a smaller version of the right angle GM3 gear motor. This motor looks to be made out of plastic with a chrome finished shaft. This shaft is a cut shape so that it is easier to attach parts to it without slipping. It can also be pushed through the output gear to both sides of the motor so that the shaft can be used both ways. The size of the motor is 53mm by 13mm by 19mm so it should not be too hard to fit into the wall. Although it is small, the right angle shape of it may cause problems when trying to stabilize it inside of the wall. The motor starts at .58 volts and goes only about 7rpm which is really slow for a motor, but it reaches up to 145rpm. It can also only hold a max of 25 in-oz of torque. If it ends up going over 25in-oz then it will stop spinning. This is because it contains a safety clutch which engages when it goes over this amount of torque. This motor only costs about $8.00 on the Hobby Engineering website. Overall this motor is probably not going to be strong enough for the type of project the group is working on. [12]

The AC Synchronous Motors is found on the Anaheim Automation website. This motor is fully powered by an AC power source. It comes in six different sizes that range from 2.3 inches across to 6.14 inches across. Since there are motors ranging from 2.3 inches to 6.14 inches, the smaller motors should be able to fit inside a wall which is necessary to maintain a low visibility of the mechanisms. These motors are all very powerful and maintain a high torque capability. This is essential for lifting a window because if the torque is not high enough then the window will not open because the force against the motor will stop the shaft from turning. These motors contain a torque from 42 ounce-inches to 1,699 ounce-inches. If the group ended up buying a motor with 1,699 ounce-inches it would be a waste of money and power because it is way more torque than needed to open a window. All of these motors run at a fixed rate of 72 rpm. This means that the group would not be able to change the speed of the motor incase it was running too fast or too slow. The window should run at a smooth rate and not go flying up or down for safety purposes. Another downfall to these motors is that it is an AC motor. The group needs a DC motor because they want it to be run through the circuit board. The FPGA board will be sending out a DC power supply to the window so that it can run

and since this motor will be an AC motor, it will not be compatible. These motors also cost about $62.10 for the smallest motor and it goes up to $343.90 for the largest motor. The cost of these motors would be too great for the type of motor the group is getting. The group does not need a motor that has a torque that is as high as 1,699 ounce-inch and should not spend that much money on just the motor. [13]

3.4 Power

There are many different products that can provide the required power. A standard, plug in transformer could provide the main operating power (12V at 3A). For example the PST-AC1230-CIG was considered. It cost $22.50 which is within budget. This is one of the most cost effective solutions. It takes in 100-240 VAC 50/60 Hz. It produces 12VDC at 36 Watts peak. It has been approved by the following agencies: UL, cUL, CE, LPS, FCC, GS, Intertek S, PSE, JQA, and ROHS. This would make it ideal except that the output is a cigarette lighter socket on a six foot cord. Also there would be no way of ensuring the accuracy of the voltage. The noise on the output is not specified and there may not be enough capacitance to hold the voltage within the necessary range while driving the solenoids. Another power supply that was considered was the PST-AC1230W. It also costs $22.50, which as previously stated is within budget and thus one of the most cost effective solutions. It takes in 100-240VAC 47-63Hz. It produces 12VDC 3A typical. It has been approved by the following agencies: UL, cUL, FCC, PSE JQA, and LPS. This would make it ideal except that there is specification on the noise on the output. Also, there may not be enough capacitance on the output to hold the output voltage within the required range while driving the solenoids. Its output connector is a 5.5 x 2.1mm barrel connector. This would be much better than the PST-AC1230-CIG as PCB mount barrel connector jacks are available. Thus it would be able to plug directly into the CCA. A third external power supply unit investigated was the DSA-04212. It takes in 110VAC / 230VAC typical. It outputs 12V 3.5A typical. Its output connector is a 5.5mm barrel connector as well which again can be plugged directly into the CCA via a PCB mountable barrel connector jack. It has 120mVpp ripple max on the output. This is acceptable for components on the CCA that require 12VDC. However it's operating temperature is 0 to 40°C. This is unacceptable because the environment is not guaranteed to be within this range. The enclosure may reach temperatures approaching 70°C. All of the previously mentioned power supply units have been external power supplies. As such they all need to be plugged into a wall outlet. This would require a cable surface mounted to the wall which, while effective, is not desirable mainly for aesthetic reasons.

Another option is a PCB mountable AC to DC converter. An acceptable product would be the AME40-MAZ. This allows for more control over the tolerance and noise because different tolerance levels are available for purchase. For example, the AME40-MAZ is available with a 12V 3.3A max output. It is encapsulated and ideal for PCB mounting. These can be purchased with specific tolerances. For example the AME40-MAZ guarantees its output voltage within 2% and has 50mVpp ripple noise with 200MHz bandwidth. The problem with this is that as the tolerance gets better and the noise goes down, the price goes up. It would cost several times more than the external power supply units. In order to be within our required tolerance and noise levels it was determined that

this would be too costly of an option. Furthermore the encapsulated power supply unit would require too much space on the CCA.

Thus it was decided that the best solution would be to design the power regulation. This can be done with transformers, diodes, capacitors, and voltage regulators. The input to the circuit is 120Vac. This will need to be dropped down to an acceptable voltage level for a 12VDC voltage regulator. Thus a transformer will be needed. There are several choices that were investigated as possible solutions for a transformer. The voltage input level for the transformer has to be 120Vac 60Hz. The current handling capability needs to be at least 3A. This level was set by the max current draw from the CCA and the Solenoid. A surface mount transformer is available from Triad Magnetics. The input voltage is 115 / 230VAC at 50 / 60Hz. The output is 16V at 3.5A. This is acceptable because voltage regulators will be used to supply 12V and below. This will ensure the more stable voltages that are required by the CCA. However main drawback is that the physical size of the transformer would be too large. The CCA will only have a limited amount of space and it was deemed that the surface mount transformers would be too consuming. Nevertheless a suitable product was found through RadioShack. It will output 37Vac 60Hhz from the required input and with the required current. The transformer with 37Vac output was chosen because the 12VDC is required on the CCA and the voltage regulator for 12VDC requires 15VDC input. Although the voltage drop form input to output is very large, this allows the voltage regulator to regulate more effectively, thus guaranteeing a steady output. This transformer is chassis mount instead of surface mount. This will allow for better heat dissipation away from the transformer. Furthermore, being chassis mounted, it will not dissipate its heat into the CCA itself. Lastly this will save space on the CCA.

The 37Vac 60Hz output from the transformer will need to be converted from AC to DC. This will be done using full wave rectification. Again to save space and money it was decided that a rectifier network would be used. An efficient solution was found at RadioShack. A 4A 50V Full-Wave Bridge Rectifier was found and more than meets the requirements of the project. Vishay also has an acceptable product. It is capable of handling 4A 200V. This is also more than acceptable for the project, however this is less than half the price of the one found at RadioShack. Capacitors will be added that will move the voltage level into the acceptable range for the input of the 12V voltage regulator. Several filtering capacitors will be placed between the full-wave bridge rectifier and the 12V voltage regulator which will remove noise from the lines as well.

Two 12VDC Voltage regulators will be used. The first 12VDC regulator will have current handling capabilities of 3A. This will be used only as the driving power for the solenoids. Several of the regulators considered include the LM2576HVT-12/NOPB, the LM2577T-12/NOPB, the LM2596T-12/NOPB, and the LM2676SD-12. All of these have similar qualities. However the LM2577T-12/NOPB is a step-up voltage regulator, which in this case is not the goal. The rest of the choices were so similar that it came down to price. In the end the LM2676SD-12 was chosen because it meets all the requirements and is the most cost effective. The LLP-14 package was chosen because it is acceptable for our design and is immediately available. The second 12V voltage regulator will have

current handling of 1A. This is the main 12V power and will be used for powering a 12V level translator and the remaining voltage regulators. While investigating other 12V 1A voltage regulators it was decided that, for ease of the CCA design, two of the LM2676SD-12s will be used even though this specific part is capable of handling 3A instead of 1A. The LM2676SD-12 is again one of the most cost effective parts even in the 1A range. The minimum input of both 12V regulators is 15VDC. The maximum input is 40VDC. Thus the transformer mentioned above is ideal for this. For 12VDC #1 the On/Off pin will be connected to ground via a switch so it may be controlled physically. For 12VDC #2 the On/Off pin will be connected to ground via a FET so that it may be controlled by the FPGA.

The 5VDC voltage regulator, which will be used to power a 5V level translator and the analog to digital converters, will be powered by the main 12V voltage regulator. After researching various parts the LM2676SD-5.0 was deemed to be an efficient and cost effective choice. Again the LLP-14 package will be used for ease of CCA design. It has the same basic layout as the 12V voltage regulator chosen. 12VDC is the ideal input voltage for this 5V regulator. The part chosen is capable of sourcing 3A which is above the required current minimum for the 5V supply. Nevertheless it was more cost efficient than the lower current options. Thus it met all the requirements, was less expensive, and allowed for reuse of circuit design. The On/Off pin will be left floating so it is always on when power is available.

The 3.3V voltage regulator was chosen in much the same way. The FPGA requires the 3.3V line to be between 3.135V and 3.465V at all times. Thus the voltage regulator chosen needed to be within that range. The LM2676SD-3.3 was chosen because it guarantees an output of 3.234V to 3.366V at ambient temperatures. It further guarantees an output of 3.201V to 3.399V over the entire temperature range. This makes it ideal for the circuit design. The maximum input is 40V while the minimum voltage is 8V. This makes the 12V supply ideal to power the 3.3V regulator. The 3.3V regulator is capable of sourcing 3A which is again more than what is required. However it meets the minimum requirements and is the most cost efficient choice. The On/Off pin will be left floating so it is always on when power is available. Because the regulator is capable of sourcing 3A it is also ideal for the second 3.3V regulator needed for the window motors. Therefore for repetition of circuitry and ease of design two of the LM2676SD-3.3 voltage regulators will be used.

The FPGA requires a 1.2V source that is between 1.14V and 1.26V at all times. The voltage regulator chosen guarantees an output of 1.17V to 1.23V at 10mA over the full temperature range (-40°C to 125°C). The 1.2V voltage regulator has an input voltage range of 2.7V to 5.5V with 3.6V recommended. This makes the 3.3V supply the best choice for this regulator. It is capable of sourcing 400mA which is more than what is needed but it is again the most cost efficient choice that meets all the minimum requirements. It is available in the Thin MLF package which must be mounted similar to the LLP-14 packages of the 5V and 3.3V regulators. Thus it is an acceptable choice. The enable pin will be tied to the Vcc pin so it is always on when power is available.

3.5 Server

In order to provide a web based home monitoring system, it was obvious that a server would be needed to support web services. The main goal of this server will be to host a website that allows user to interface with the home system by monitoring the current state of the system and various characteristics, and to implement certain actions of the system. There are many free and purchasable web server programs on the internet, so there will have to be certain requirements determined to select an appropriate program. First, the most likely program will be a free open source web server program. This is because this current project is a prototype and is not mean for market implementation. If this system is decided to go into the market, several things will have to be rethought including the design of the server, but for the projects purposes a free web server program will be sufficient. Second, the web server program will have to be able to run on either a Windows based or Linux based operating system. Third, the sever will have to operate in real time web services. Other variants that will determine the appropriate program for this system will include ease of updating server files, ability of some form of security, ability of defining users, and more. From some research three web server programs were chosen for further research: Tornado, Apache, Nostromo.

The first web server program found is the Tornado web server. Tornado is a free, open source web server software. Tornado is a non-blocking web server written in Python. The main advantages of Tornado is that it is non-blocking, therefore making it capable of handling thousands of connections simultaneously. This capability makes Tornado a great server for real time applications. Although this project will never require that many connections at one time it is still capable and is also ideal for real time services which is what this will require.

The main and obvious advantage of Tornado is its connection capabilities and speed. This is done by making the server non-blocking and implementing epoll. Epoll is basically an input and output event notification facility. Its main purpose is to handle how files are called and retrieved. Another advantage of Tornado is that it comes with support for building a basic web server. It contains templates for creating pages and files. Tornado also has built in support for user authentication and third party authentication. User authentication is going to be a major aspect of the server. Because the system will allow the user to change current states of the home, such as opening windows and doors, it is important that only the correct users are able to access the website and operate the system.

Tornado has many great features including basic building blocks of websites and the server, real time web services, and high performance. There are downfalls to the Tornado web server program. One main disadvantage is that it is generally run on a Linux based system. Another disadvantage to Tornado is that it is written in the python programming language. Python is an open source license, so it is free to use and is supported on Windows, Linux, and Mac operating systems. The only downfall to using python is that it is a different programming language. Our team has never been

introduced to python before, and taking the time to learn a new programming language might be crucial. [25]

Another possible web server program is Apache. Apache is a free open source web server programs supported by the Apache Software Foundation. Apache provides many software projects for a variety of different uses. Apache web server is one of the most popular and widely used free web server software on the internet. Apache HTTP Server and Apache Tomcat are two web server projects that are available and are possibilities for this project. HTTP Server is a server designed for Unix and Windows operating systems. A main advantage to Apache HTTP Server is that it is designed in modules. This design makes it easy to implement new features without making time consuming changes to the core of the web server. Apache HTTP Server is by far the most popular project from Apache and often just called Apache. The HTTP server is said to have played a key role in the world wide web's initial growth, which makes it not surprising that it became the first web server to reach the one hundred million web site milestone. One good thing for this project of Apache being so popular is that it has lost of online support and tutorials. The HTTP server is also written in the C programming language, which is also a benefit because that language is well known and time will not have to be spent learning a new programming language.

Other beneficial features of the HTTP server are its capabilities of user authentication, CGI dynamic content, and per-user web directories. One of the biggest things that the server will require is user authentication. The HTTP server has several modules that help with authentication of clients' access to the web server. The server basically works in two steps; first the web server has an authentication provider. This is generally a file that has all of the users or aliases with corresponding passwords, which is stored in an offline directory on the server so that it cannot be accessed through the web. Then when a user tries and accesses the web server it will go through the authorization process which is handled by the server's authorization module. When a request is made, the server will look up the user inside the authentication provider and see if that user has access. The server has several different options for accounts, such as: single users, owners, groups, and default accounts.

Another important aspect of this project is that it will be supplying information that can constantly be changing. In order for this to function properly, the server will have to be able to deal with constantly changing information. The HTTP server has a module that deals with dynamic content using CGI, or Common Gateway Interface. CGI gives the server a way to communicate with external programs that are supplying the content for the web server. CGI is the most common and easiest way to incorporate dynamic content and a web site. And for this project that will be very important, because the system will need to ensure that the information coming from the house is as accurate and up-to-date as possible so the user will be able to make decisions if necessary and see the status of the home. The last helpful feature of the HTTP server is its per-user web directories. This also goes along with the user authentication aspect of the server, but it gives more flexibility for the web server. Per-user web directories means that it can be setup to allow certain users to only see certain pages on the web server. So while still allowing access

to some users, there can be restrictions put on certain pages so they can only be viewed by certain users, such as administrators and so on. [26]

The other Apache project that might be a possibility for this application is the Apache Tomcat web server. The first most important thing about Apache Tomcat server is that it implements the Java Servlet and the Java Server Pages (JSP). To this project this is very important, because one of the options for the user interface being written for this system will most likely be written in the Java programming language. Tomcat provides a platform environment to run Java code on. This would be a big selling point, because if the user interface was written all in Java then the code could be very easily combined with the Tomcat server and hopefully run smoothly and effectively, meaning less work on the server side trying to integrate the web content. As can be seen the main difference between the Apache web server, HTTP server, and the Apache Tomcat server is the different programming languages; HTTP server is written in C code and Tomcat is written in the Java programming language. Even though Tomcat is written in and uses Java code, it still has the functionality to be configured using the standard XML configuration files as in the HTTP server.

The Apache Tomcat server is operable in both Windows and Unix operating systems environments. The Tomcat web server has three main components. Catalina is the web server's servlet container, which is designed to handle servlet and Java Sever Pages. Then the web server has a HTTP connector component that supports HTTP 1.1 protocol for web server applications, which is called Coyote. HTTP 1.1 protocol is the revised version, which is most widely used, that allows reuse of the same connection instead of separate connections for each document that was used in its predecessor. The final part of the Tomcat server is the JSP engine. Tomcat's JPS engine is call Jasper. This engine parses JSP files and then assembles them into Java code as servlets for the server which are then handled by Catalina. Apache Tomcat can also provide many of the same benefits as the HTTP server, such as: user authentication, per-user directories, CGI, and then additional features not in the HTTP server.

The Apache Tomcat uses realms to deal with user authentication for access to the web server and its contents. A realm is essentially a database that stores usernames, passwords, and roles of each specified user that are valid users of the web server. By creating and placing realms in different areas, it can be affected which web applications will have the same authentication information. Along with user authentication, Tomcat also supports SSL for more security. Tomcat also has the ability to handle dynamic content on its web pages, i.e. CGI, as in the HTTP server. But Tomcat has an advanced technique by using SSI. SSI, Server Side Includes, are directives that allow content to be updated while the pages are being viewed. SSI allows dynamically generated content to be updated on an existing page, without re-serving the entire page like CGI does.

But still the most useful aspect of the Apache Tomcat web server is it ability to handle Java code. This is done by implementing the Java servlet and JSP specifications to provide a platform to run Java code on a web server. Having the ability to use JSP technology is a great benefit because it allows the developer a fast and easy way to create

and display web content that is dynamic. Another benefit found is that Apache Tomcat can be integrated with a Java EE Platform, making it even easier to update and implement Java code and JSP files. [27]

Yet another web server software is Nostromo. Nostromo, known as nhttpd, is another free web server program off of the internet. Nostromo is a fast and simple HTTP server that runs as a single process. One of the main prospects of Nostromo is that it is fast and secure. It uses SSL in ensuring secure connections. SSL is the secure socket layer which matches certificates in order for access to the website, if the certificate from the client computer matches the key on the web server then access is granted to the client, otherwise access is aborted. Nostromo also supplies capabilities to implement basic authentication. This web server also implements a user file containing users and crypted passwords for each user. Another advantage of this web server is that it is written in C programming language. This means that no new or special programming languages will have to be learned. But a main disadvantage to Nostromo is that it is only Linux and BSD compatible, BSD is a Unix based operating system developed at the University of California, Berkeley. [28]

The last web server researched for this project was the Internet Information Services (IIS). This web server software was created by Microsoft which was designed to be specifically used with the Windows operating systems. IIS can handle many protocols including: FTP, FTPS, SMTP, NNTP, and HTTP/HTTPS. If it were to be combined with the C# programming language IIS can also handle ASP.net pages and version 4 .Net framework. It includes many features as the other web servers including SSL, user accounts and many other security and content modules.

Originally after reviewing all of the possibilities for web server programs, it was decided that Apache Tomcat web server would be the best solution for implementation in this system. This was chosen in the beginning when the group decided to use the Java programming language.

This decision was based on all of the available features and requirements of the web server, as shown in Table 3.5a Web Servers below. All of the web servers were found to be able to handle some form of user authentication, which is a big part of the system because only specific users will be allowed access to the system. Also, operating systems played an important role in choosing a web server program. Since this is a prototype of the system that will be built, the server being used is going to be a laptop that is already currently owned, which currently runs a Microsoft Windows operating system. From that requirement alone, the available web servers were narrowed down to either the Apache HTTP or Apache Tomcat web server programs. Both of these servers employ some of the features that are necessary for this system, including: handling user authentication, ability to deploy dynamic content, and enabling secure connections.

The main differences between these two programs, as described above, are their languages and abilities therein. The Apache HTTP web server runs in the C programming language, which is not a problem because that is a know language of the team and would

not require learning a new code language. But, the Apache Tomcat server runs Java code. Along with running Java code, Tomcat also has the functionality of being able to implement Java Servlet and Java Server Pages (JSP). This is a huge advantage because it will make it easier to create and deploy the user interface that will be written in Java. Having this ability, running on a Windows operating system, and having all of the other features made Apache Tomcat the most appealing web server for this web based home monitoring system.

But through the development of the project the group switched to using the C# programming language. In making this switch, it was also needed to change the web server to be implemented. For the final development, the Internet Information Services web server was chosen to host the web site. The final system the web server was deployed on was a personal desktop computer running Microsoft Windows Vista.

Table 3.5a - Web Servers

Web Server	Programming Language	Operating System	User Authn.	Dynamic Content	SSL
Tornado	Python	Mac Linux	X		
Apache HTTP	C	Windows Mac Linux Unix	X	X	X
Apache Tomcat	Java	Windows Mac Linux Unix	X	X	X
Nostromo	C	Linux BSD	X		X
Internet Information Services	C#	Windows	X	X	X

3.6 Graphical User Interface

C# is a programming language that involves a programmer friendly environment in which you can write code for different projects. C# has a much better interface between the user and the running program than languages like C or UNIX. C# has a lot of different operations that allow this interface to be one of the most functionally and visually attractive programs. Through Visual Studios the user can work on a friendlier layout so that tasks can be performed easier and more efficiently.

Visual Studio is a program that uses C# programming along with HTML and SQL code. This entails an interface that provides the user with a means to run the program in a user friendly environment. It provides multiple functions that help the programmer to create a layout for the programs interface. These functions deal with all different aspects of the interface including its layout, type, mouse interactions, keyboard interaction, graphical implementation and more.

In the interface the layout helps the programmer organize where the different objects should go. There are many different types of layouts that can be used for different purposes. A generic layout is the flow layout which is used for putting information in a left to right, top to bottom form. This is not the best layout to use because it is harder to sort where you want your buttons and panels to be placed. Another well known layout is the table layout. This is a good layout to use for a set of items that should be equally spaced in an equally sized table on the page. A good example of a table layout is a calculator on the computer. The most common type of layout is a border layout which has north, south, east, west, and center quadrants. These quadrants can have separate layouts inside of them or they can just contain a panel, multiple buttons, text fields, and so on. Each layout has its own unique features which are helpful in all different cases. The layout should represent how the programmer wishes the user to view the information in which he is presenting.

The layout in which the programmer constructs can be placed on a few different types of interfaces. One of these types is a frame which can be used as a pop-up window when using the Visual Studios - Windows Form Application. A frame can be used in many cases on a computer; for example, a calculator on a computer is a great example of what a frame looks like. Simple dialog boxes that pop up when installing software on a computer are types of frame. These can also be Error message dialog boxes which are simplistic forms of a frame. Some other simplistic form of these boxes can include Yes/No dialog boxes or they can be conformation/input dialog boxes. Another type of interface is an Applet interface which is mostly used online and with java code. This type of interface does not usually pop-up in its own frame, but it is opened on the web. The aspx pages are the more advanced version and are included within the Visual Studio program. This is the best type of interface to implement on a website because it can be used among all of the text and pictures that the page already provides. An aspx page uses html code to provide the programmer a way to implement the program onto a website along with all of the other information already on it.

Along with the different types and layouts of the user interface, other useful tools are the Click operation. The Image_Click is one which allows the user to click anywhere on the C# image and the program can track where the image was clicked. This can be very helpful when the programmer wants a picture to be interactive. A simple click on different parts of a picture can perform a specific action in which the programmer has instructed it to do. Along with the Click operation, there is a Alternate Text property that track where the mouse moves across the image. This function allows the programmer to track where the user is moving the mouse and if over a specified position will display some text. When working with the Alternate Text property it is almost like working with

the Click operation except the program doesn't need the user to click on anything. This means that if the programmer wants the user to move the mouse to a specific portion on the screen to make the program perform some operation, he can do so. This can be helpful for tool tips, which are tips that pop up under the mouse when it runs over a specific object in the program and gives the user a brief description about what that object is or does. The Button_Click is another tool that is used to make a button perform a task. Each action in which the programmer wishes a button to perform needs to be written inside the Click method and the button itself needs to have the Button_Click method added to it. Multiple buttons can be used on the same page but they need to be within separate methods that are accessed for each one.

A tool used in java programming that allows a user to interact with the program using keys to perform tasks is called a KeyListener. The KeyListener can be used for all different aspects to different programs. For a simple example, a KeyListener can be used for a quicker means to click on the next or ok buttons by hitting 'Enter' on the keyboard so that the user doesn't need the mouse when filling out forms. Same with the 'tab' key when trying to go to the next text field. The KeyListener can be exceptionally useful when trying to play an arcade game on the computer. When the user wants the character to move across the screen they normally use the arrow keys, or to jump they hit the spacebar. These are good examples on why one would use a KeyListener and what type of program they should use it on. These can be implemented in Visual Studios without needing to enable a KeyListener.

Graphics used in the game simulations or for any program can make the program easier to understand or just more fun to use. For many programs there are graphics all over the page that can be used to visually entice people to view the page or to just show a trade mark. Graphics are used every day to grab people's attention in one way or another. Every video gamers dream is a game with graphics that are more advanced than the graphics on the game that they may be playing. Graphics can be used in many different ways and can be very helpful to portray a specific point or cause. In Visual Studios the graphics deal with a large portion of how the interface between the user and the program look. These graphics can be seen throughout everything between the color and design of simple buttons to huge drawling. However they are displayed they can create a large impact on how the user sees the program and how much they enjoy using it. Graphics in the form of a picture or drawling are usually placed within a asp image panel. This image panels can be placed anywhere on the layout in which the programmer is designing but wherever the panel is, the graphics are going to be. Through the use of the Visual Studio C# programming, the programmer can design a panel that contains graphics in which the users can perform actions on. The graphics within these types of programs can be always changing because the images can be constantly moving and can continuously updated.

3.7 Microcontroller vs. FPGA

A Field Programmable Gate Array (FPGA) is an integrated circuit (IC) which can be reconfigured to fit the needs of the designers at the time of implementation. Before the development of the FPGA designers would have to make their custom designs at the

board level. What this work entailed was developing a board with standard components and in the end the designs were very expensive. FPGAs have been used for the development of Instruction Level Parallelism (ILP) and the implementation of pipelining at the register transfer level.[39] So, the ability of the FPGA to be reconfigurable is a huge advantage compared to other ICs because of the reduction in time spent in testing and integration.

FPGAs are composed of logic cells. The logic cells in a FPGA can be seen as the standard component in any other IC. The logic cells are identical and any one of them can take on any programmable interconnection specified by the FPGA and designers. Physically, there is a matrix of wires and switches in the FPGA which connect each of the logic cells. The logic cells are surrounded by a ring of input-output (I/O) interface blocks. The I/O block connects logic cells to IC pins.[31] When a user creates their design it is implemented by specifying in the logic cells the required logic functions and then cutting off the switches to the other cells in the matrix. Similar to the idea using bricks to build a wall, the array of logic cells connect together to create a logical circuit. The logic circuit created by the designer will be used to connect different components. The set of logic cells will be implemented as either a set of multiplexers, gates, or lookup tables (LUT). The advantage of a LUT is they tend to be more flexible when compared to multiplexers, because the LUT provides more inputs per cell compared to the multiplexer. However, the expense of using LUT is a larger propagation delay.[36] This propagation delay slows down the processing speed of the circuit, but the design would be more robust utilizing this feature. Not all logic cells are built the same, so designers need to be aware of the architecture of the logic cells for the devices they use.

Most of the development using FPGA is done by using specialized software. The reason for this form of implementation is to do FPGA any other way would be manpower intensive and costly for this portion of the project. The way the software will integrate someone's design will be in one of two ways. The designer will either create a schematic of their design or they will write code written in a hardware description language (HDL). What is nice about the software is that it also allows the user to influence the implementation and attempt to improve performance. Some software packages also include predefined functions which cut down on implementation time of some of the more common logical components such as an adder.

A microcontroller is a type of computer, which can be implemented on a chip. Microcontrollers are embedded onto some other device in most cases. Microcontrollers can only execute one program at a time and for most microcontrollers this is their sole purpose. The program will be stored in the microcontrollers read – only memory or (ROM). The benefit of this is the microcontroller can be turned off and the memory of the program will still exist and not be lost. The reason the microcontroller can do this is because ROM is nonvolatile memory. Nonvolatile memory can be turned off and still retain its memory. This is an important fact to know because microcontrollers do not run on continuous power. This means if the system is suddenly turned off the operations it was previously running will be lost. Microcontrollers contain everything in a microprocessor and much more. Some of the other components in a microcontroller

include: memory, timer, analog-to-digital converter, digital-to-analog converter, direct memory access (DMA) controller, parallel I/O interfaces, serial I/O interfaces, and memory component interface circuitry. Microcontrollers allow designers to gather input from sensors, interpret the input data to perform actions, and output the result on the microcontroller to perform some action.[33][37]

Microcontrollers transfer data by electrical signal to electronic gates. The more intricate a logical design, the more electronic gates which will be needed. A nice feature of microcontrollers is that they are programmable. So, instead of going through the effort of physically implementing the electronic gates for a design, we can create a program on a microcontroller that will do the work for us.

A microprocessor is a type of processor put into a single IC. A processor is divided into three major components. The three components of a processor are the registers, arithmetic logic unit (ALU), and the control unit. A register is a storage location in a processor for data while instructions from a program are being executed. Registers are faster to access than data in memory, so as a result registers have some effect on the efficiency of the processor. The system will need to react in real time, so the registers will be critical to sending information continuously. The amount of registers in a processor will vary based on the processor. The ALU acts as the computers numerical calculator and its logical operation evaluator. The ALU receives data from either the registers or main memory or both. The ALU will perform the necessary calculations and if necessary write the data back to either the registers or main memory. This means the ALU will translate the sensory information to be relayed to the server. The control unit has the hardware logic for the device. The control unit is the compiler of the instructions to be executed, and the control unit also monitors the instructions to be executed. The control unit is the mediator between the processor and the other components of the computer, because the components are fighting for resources provided by the processor. How well the control unit manages the resources of the system effects the ability of the system to make computations. Microprocessors come in different models ranging in computational ability from a 4 – bit model to a 64 – bit model. The larger the number of bits the microprocessor can handle, the greater the number of binary digits the microprocessor can manipulate in a single instruction. This means instructions will be executed quickly and the homeowner will gain information faster. There are several reasons why microprocessors were over taken by microcontrollers. Microprocessors cannot execute programs without external memory. Microprocessors cannot directly interface to I/O devices. Glue logic is needed in order to connect external memory and I/O devices to a microprocessor. Glue logic is made up of decoders and buffers.

Going back to the original problem statement, the device the group chooses will be the one which best fits our needs. The device will act as medium between the sensors and a server. The server will be connected to the website. Based on what was written about FPGA and microcontrollers, the team hypothesized that a FPGA would be a better fit for our project. One factor which will be considered in the design was the usage of power. A benefit of the FPGA is that they run on continuous power while a microcontroller has a power saving mode. Another factor which the team did not consider was the performance

of the system in terms of efficiency, but rather in terms of effectiveness. FPGAs have a higher level of performance compared to microcontrollers. There are several reasons why FPGAs would be the best fit for our project.

FPGAs appear to be a great device, which can configure any design the team creates. While compared to the FPGA, the microcontroller is not as adaptable of a device it is very effective in doing a singular task. For the scope of this project, the group will need a device to perform one task. The task to reiterate will be to take data from the sensors and relay it back to the server. Now, the FPGA would be able to perform the above tasks with little difficulty.

While the FPGA better fits the needs for this project now, the team has to also look to the future and consider which device would be more applicable for manufacturing. More devices made today are made with microcontrollers compared to FPGAs. When you compare the two devices the microcontroller has a shorting time to market when compared to the FPGA. A shorter time to market could mean higher revenue profits for a company investing in products made with microcontrollers. Changing subjects, when it comes to manufacturing a product, the more functionality that a product has does not necessarily cost the producer more money. Unfortunately in this case, FPGA is a less expensive device when compared to a microcontroller. An FPGA will have the exact functionality needed while a microcontroller may have functionality never used. This is a necessary thought process, because this product will be self funded by the developers. Even though the microcontroller is more expensive it meets the design requirement more so than a FPGA.[38]

Both devices have some level of programming needed to make the devices function. They both utilize a form of hardware development language or (HDL). This is not a huge factor, but one which must be considered. Most of the developers have some prior experience programming an FPGA and a microcontroller. However, microcontrollers are easier to program than the FPGA. Part of the reason why FPGAs are more difficult to program is that it is difficult to design and debug on a FPGA compared to microcontroller. So, in a nut shell the group is taking a hit when it comes to the technical difficulty. On the other hand FPGAs are cheaper to use compared to microcontrollers. A greater difficulty programming means that the group will increase the amount of time on testing and integration. This is huge, because time is a big factor in this project and any where the team can cut down time to completion has to be considered.

Now, the FPGA the team will choose can use embedded Ethernet. As of this moment this is the most important specification related to the microcontroller. It is a single chip implementation of an Ethernet network. Embedded Ethernet can be used to connect a variety of devices to the internet such as sensors, webcams, and monitors. The group is aware from research that embedded Ethernet has the ability to generate digital and analog signals. This could be a beneficial feature for the project. The temperature and motion sensors will be transmitted by digital or analog signals. A nice feature of embedded Ethernet is it gives the user the ability to connect to the internet without the connecting to a computer as a form of connection. What this means is that data transferred from the

sensors can be transmitted in real time to the server. The ability to transmit data from the sensors in real time is one of the primary goals of the project. If the team is not able to transmit in real time then the project will not be as accurate and will not meet the needs of the users. Embedded Ethernet has the ability to save data, to be processed at a later time. This feature has the ability to enhance the user satisfaction of the project. For example, if a user wants to define a specified time to open the windows of their house then using Embedded Ethernet, they should be able to do this. The developers believe the more convenient it is to use this device, the more the user will like it. So, additional features on a device which are beneficial to the user are a benefit to the developer as long as there is not an added cost. Besides the functional benefits of using embedded Ethernet in the project there are some practical reasons for its justification.[34]

The developers deduced from research that embedded Ethernet would be preferred in a situation like this compared to wireless. It did not appear to make logical sense to create a wireless network for a stationary system. The embedded Ethernet is a feature of the FPGA which can be connected to the sensors and the server. The system itself will not mobile, it will stay stationary in a house if the group were to make a home implementation. In the case of the prototype the group will be using a FPGA with the option of embedded Ethernet. This is not to say that a user can not connect to the system from a remote relocation. If this were the case than one of the goals for the project would not be met and the project would not be complete. In the process of beginning the development of the project the team has already set up a server and connected it through the internet as long as the system has the ip address of the server. So the embedded Ethernet is connecting devices to one another and not connecting users to the system. Besides the embedded Ethernet on the microcontroller there will be other specification for the FPGA. For example, the group will need to make a decision regarding how many I/O pins will be needed to make this system implementable. In general communication between devices such as the one for our project will be done with either RS-232 or RS-422/485.[35]

RS-232s are fairly inexpensive when compared to a RS-422/485. For example, a RS-422/485 can range in price from $150 to $1,300. The extreme end of the cost of the RS-422/485 is outside the scope of our project. One benefit of the RS-422/485 is that more than one device can be connect to it when compared to a RS-232, which have only one device connected to the RS-232 port at a time. In most cases it is rare to see a RS-232 with more than two RS-232 ports. The RS-232 can only operate over a range of 50 feet. However, if a developer were to connect the RS-232 to a modem, the range of the RS-232 would greatly increase. What is nice about the RS-232 is that even though they have very few ports, most PCs have the ability to connect to an RS-232 line with little or no hassle. All that is needed to make a connection with a RS-232 port is a compatible cable and a terminal program. However, the RS-422/485 can be very difficult to implement. Part of the reason for this is a lack of a communication standard on the RS-422/485. The RS-422/485 has one line to run data back and forth on. So, every device on the line has to have a unique address to distinguish it from all the other devices. This is to allow for the data to be received and sent by the different devices. There has to be some way for data to flow and be controlled by the system. A negative aspect of the RS-232 is that ports are

not electrically isolated, but in the RS-422/485 they are. What electrically isolated means is that if there is some form of electrical discharge within the RS-232 line whatever devices were connected will be destroyed. Now, this problem can be adverted if the developer is willing to purchase a RS-232 isolator.[35]

The best serial standard for the scope of this project would be the RS-232 instead of the RS-422/485. The reasons for the not choosing the RS-422/485 is cost, implementation, and functionality. Cost was a big factor in the decision to choose the RS-232, because of the small budget for this project. While, maybe not as important as the cost as a determining factor, the level of implementation is important. In this case the RS-232 better fits the goal for the design and implementation of the project. The RS-232 requires fewer accessories when compared with the RS-422/485. A RS-422/485 requires a lot of wiring for the I/O devices, and if you move one of the devices. The wiring to the device will also have to be moved as well. If a developer wants to interconnect the I/O devices using RS-422/485 it can become very expensive. In regards to the functionality of the serial standard that fact that the RS-232 can operate within the means of our project is beneficial. Our system is supposed to simulate a home. So, the ability of a serial standard to operate over a wide range is not necessary to meet the requirements for our design. For example, the RS-422/485 can operate at speeds of up to 115kbaud over 4,000 ft. This functionality was very appealing; however not necessary for us. Not to the mention that this functionality could be part of the reason why the RS-422/485 is more expensive than the RS-232. So, additional functionalities in our devices which are not used cost more money. If they can be avoided for more compatible devices to the design, then the team needs to consider them.

3.8 Solenoid

The Door lock will be able to be driven into two positions, locked and unlocked. Several driving mechanisms were investigated. The first thing investigated was motors. One of the motors investigated was the RKI-1035. It is a 10RPM 12V motor. The no load current is 60mA max and the load current is 300mA max. This is ideal for the design requirements and the PDU can easily produce this output. However, the problem with this is that it would not easily fit within the door. The overall size of the motor would be too large and the shaft of the motor would not line up with that of the door lock. Also this particular motor is not able to be driven two ways. This would then require two motors. Motors are also slower than actuators or solenoids. Thus rotary actuators were investigated. Specifically the 190836-024 was investigated as a likely solution. This allows for up to 100% duty cycle which would allow for whatever duration pulse is necessary to drive the door lock into the appropriate position. The coil resistance is 5Ω and with a 12V supply that would require 2.4A from the PDU. Thus it would be perfect for the circuit designed. The size of the actuator is small enough such that it would fit easily in the door behind the door lock. However, like the motor this is not bi-directional. Thus there would need to be two. Furthermore the maximum stroke is 45° from the starting point. In order to drive the door lock to a fully engaged or disengaged position there would need to be a 90° stroke. This is the maximum stroke available in the rotary actuators. Thus rotary solenoids were investigated. These are available with strokes of up

to 110°. The solenoid that would be chosen had a stroke of 95°. Thus it would drive the door lock all the way but the solenoid itself would not be driven through its full range. This is an acceptable solution except that again it is not bi-directional, thus requiring two solenoids. None of the previously mentioned drive solutions would not be able to attach easily to the door lock. They would need a chain drive or something similar to attach to the deadbolt shaft. An attempt was made to find a gear to fit on the end of each driving shaft and a chain thin enough to fit in the allotted space next to the door lock. A gear and chain solution proved to be too complicated. An appropriate chain could not be found mainly because of the limiting factor of size. There is not enough space to allow for a chain and there was no convenient method of attaching a gear to both the door lock and the drive shaft. Of the three previously mentioned solutions the motor was by far the most cost effective. The RKI-1035 cost $5.00 while the rotary actuator and rotary solenoid were both between $30 and $80. Thus the rotary actuator and rotary solenoid were both eliminated due to price restraints as well as performance restrictions. The motor was eliminated mainly due to size and performance restrictions.

Other alternatives investigated were linear actuators. These eliminated the need for chain and gear drive. However some of the same limitations apply. The prices are in the same range. For example a 50mm mini linear actuator costs $90. This is several times higher than the desired price. Furthermore it is not bi-directional, and as such the design would require two. The stroke size of this particular actuator is also too large. The required stroke size for the design is one inch. Nevertheless the 50mm stroke would work. It would be inefficient and would take up too much space within the door. It would require hollowing out a large section of the door behind the door lock. Linear solenoids would not have this much problem as they are smaller. However because of this their stroke size is also smaller. Many of those that are available do not meet the required stroke length. Those that do would be more desirable if they were push/pull instead of one or the other. Linear actuators were also not as readily available as solenoids. Many of the retailers/manufactures sold custom solution products. The same is true of the push/pull versions of solenoids. Push or pull solenoids were more readily available as commercial off-the-shelf items.

The driving mechanism was decided to be solenoids. These appear to be the best driver to fit the project design. The solenoid chosen is a “Push” type. This requires that two solenoids are purchased. One solenoid will be able to push the deadbolt into the locked position and the other will be able to push it into the unlocked position. The overall length of the deadbolt stroke is one inch. It is spring loaded however. This allows for the use of a solenoid that does not necessarily have a one inch stroke. Once the deadbolt is moved past the half way point the internal spring will take over and push it the rest of the way. Thus the solenoid will have to be able to push the deadbolt at least one-half inch. The max stroke of the solenoid chosen is one-half inch. It was determined that a half inch stroke would be enough due to the spring in the deadbolt and the speed of the solenoid. The solenoid should move from fully retracted to fully engaged in 1ms max. To achieve this, the solenoid will be driven with a 12V (3A max) 500ms pulse. The solenoid will need to be spring loaded as well. Once the solenoid drives the plunger into the engaged position (out) it cannot stay that way because the lock would not be able to be manually

maneuvered. The deadbolt needs to be able to be locked and unlocked by key. This allows for the homeowner to enter and exit the home without changing their normal habits. Also if the plunger of the unlocking solenoid was to remain engaged it would catch on the door frame and inhibit the movement of the door. This is also a safety precaution so that if the power goes out the homeowner will still be able to use the lock as normal. The first solenoid chosen is SOTUH01002512P from ElectroMechanicsOnline.com. It takes in 12V at approximately 1.5A and can be driven for up to 4 seconds. This circuit will need to be drive it for 500ms. This makes it acceptable for the design. However it provides 3.14N of force. This makes it inadequate for the inside of the door. Thus a second solenoid was chosen. Part Number 195205-230 purchased from Newark.com fits the same specifications. It takes 12V at approximately 1.5A and can be driven for up to 4 seconds. However it is physically larger than the first solenoid and can therefore provide 9N of force making it acceptable for the inside of the door.

3.9 Ethernet vs. USB

In order for the printed circuit board to communicate with the server, it will need to be decided on what type of communication is used. There are several available options for this communication; the first is to use an Ethernet chip, and the second is to use a USB chip. For this communication between the printed circuit board and the server, both options were researched and two chips were found: the first is the ENC28J60/SO Microchip Ethernet integrated chip, and the second is the UM232R FTDI USB chip.

The Ethernet chip is an IC controller that converts serial data to IEEE 802.3 standards that are sent to the server. This chip operates at a data rate of 10 Mbps, with a voltage range of 3.1 V to 3.6 V. The USB chip is similar in that it converts serial data into a different format to be sent to the server. The USB chip converts the data into a USB specification format that is then read by the server. This chip operates within a 3.3 V to 5.25 V level, at a data rate from 300 to 1 Megabaud. Although both of these chips satisfy the need for communication, one is a little easier to work with. For this project the UM232R from Future Technology Devices International will be implemented into the system. This was chosen, because it will be easier to communicate with the server via a USB connection rather than an Ethernet connection. Details for each communication are located in Figure 3.9a. [29] [30]

Figure 3.9a - PCB to Server Communication Devices

Component	Data Rate	Operating Voltage	Type
ENC28J60/SO	10 Mbs	3.1 V – 3.6 V	Ethernet
UM232R	300 Baud – 3MBaud	3.3 V – 5.25 V	USB

3.10 Programming Languages

There are many different programming languages to use for all sorts of programs. Everything from C-programming, such as C#, C++ and regular C would be able to be used as well as Java. Depending on the type of program that is being created and the users that are going to be accessing the program decides what type of program language to use to develop it. Through a vast amount of research and testing, the java programming language would be the most user friendly and compatible programming language to use for this project.

C-programming is a good programming language for a wide variety of programs. It, unlike some programming languages, is not strict on the column and line positions where other programs depend highly on exactly where you put the code you are typing. This means indent and put spaces freely throughout ones program is ok, although one would want to learn a style of writing the code to make it more efficient. C is a programming language that is good for experienced programmers that wish to write code for a specific program in a very particular way. It allows the programmer to write every aspect of the code that he wishes to implement. Although this seems to be a language that any programmer would like to use so that they can write down exactly how they want the program to run, it is not always the most programmer friendly language. C programming language can be very hard to use when trying to find out what bugs (errors in the code that need to be changed) are occurring in the program. With C there is not a lot information given to the programmer to understand what the actual bug is, or where it is located. This can be a huge problem when looking through hundreds of lines of code just for a single bug and a limited time period to find it in. This can cause the programmer to take longer to write the code needed for the program they wish to create. Along with the programming difficulties, C does not have the best user friendly interface. C programming is not a good language to use for internet or customer use. C programming is not known for nice graphical interfaces that can be easily read and understood. It is not common to find a program in C that has a popup window for the user to easily work on with buttons and text fields to perform the program in a more visual way. Unlike C, Java, and C# which have much more user friendly interfaces.

C# is another programming language which is a type of object oriented language that is very similar to the Java programming language. The C# is a programming language that is usually used on the .NET platform. This provides an internet interface in which the programmer does not have to worry as much about the small bugs in the code which will give them more room to work on their program and not the problems within it. With C# there is less errors that can occur, and more help that is given, than that found in the generic C programming language. Unlike C and C++, C# can use methods that are more flexible; for example the arrays used in C and C++ any 2D arrays are required to have sub arrays that have the same dimensions as the parent array but C# and java programming languages do not have to follow this requirement.

Java is a well known programming language that can be used for multiple purposes. Java is used in everyday applications like cell phones, computer programs, and even games.

From a user standpoint the GUI interface can be easily understood by any user who wishes to try the program. Creating games, pictures and popup boxes are easily implemented by the programmer. These windows can be understood with ease by the user by giving them a visually understandable work/play environment. Though from a user standpoint Java is a very nice language to be working on, from a programmer standpoint it is just as friendly as C#.

A C# or Java programmer can write code quicker and easier than they would be able to in C. They give a wide range of methods for the programmer to use along with the separate classes that it already provides. They also allow the programmer to easily access multiple classes for different needs, such as the Paint class or a css class. The programmer is also allowed to create interactive images by implementing a mouse listener or an image map to a program and applying an action to occur every time the image is clicked in a specified position. When writing in Java or C#, the programmer will be helped throughout the coding process with notes that pop up when typing a variable or line of code that is known to the program. These notes can be clicked on and will be automatically placed where they wanted so the programming process can go a lot quicker and with fewer mistakes.

Different from C, C# and java's programming is simplified and has fewer elements that would cause errors. Debugging these codes are the easiest types of code to debug. With all of the functions that they can assist with, it always takes less time to debug and understand. Going through every debugging process a programmer can view exactly what every variable is currently set to and what it becomes through each step. This helps the programmer understand why the program may have skipped a step or repeated a step when it was not supposed to. [4]

Java and C# contain an embedded element which will allow the programmer to create code that can be performed on a circuit board and converted to an electronic function. Java ME (Micro Edition) gives a good environment for running different applications on an embedded device. This environment is for smaller devices such as cell phones, PDA's (Personal Digital Assistant), and so on. The Java Micro Edition is a "subset of the Java SE API" and is regularly related to Java EE application services. The Java EE (Enterprise Edition) gives a good environment for larger scale applications that the Java ME was not able to do. Applications that need secure networks or are much larger than those found in the other Java editions can be run through the Java EE or the Visual Studios C# program. Finally Java SE (Standard Edition) is the generic java that provides the foundation to java's overall functionality. Java SE provides functions from all of its classes such as the GUI interface, and security. Although this is true Visual Studios C# has all of these abilities and more.[5]

4 Design and Integration

4.1 Hardware Design

4.1.1 Circuit Card Assembly

Considering the importance of the CCA, this component needs to be design and implemented before any other section. Not necessarily because it acts like the brain of the system, but because as an assembly the CCA has more components than any other part of the system. The best option to make an effective design in the time desired to design the CCA first. In the end, all of the extremities of the monitoring unit are dependent on the ability of the CCA to perform its job.

The dimensions for the CCA will be compact and portable. This component will need to be moved in order to present at its unveiling. The overall component including the subcomponents encased in it should fit in the dimension of 1 foot by 1 foot. In terms of heights the CCA should be no taller than 1 foot high. The CCA will need to have a set amount of I/O pins in order to connect the different sensors to the other components of the system. For the window there will be a pair of temperature sensor to measure the temperature outside and inside the home. The CCA will need to have at least 2 I/O lines for these sensors. The CCA will also need another I/O pin for the humidity sensor. The humidity sensor will be used to measure the relative humidity outside the home. One of the goals of the project is to be able to close the window autonomously when it rains, this component is necessary toward completing the goal. The window will have another sensor, a motion sensor which will perform exactly as the name specifies. This sensor is necessary to relay information to the homeowners about the window. The total amount of I/O pins just for the sensors is a minimum of 4 I/O lines needed for the CCA. The CCA will also be connected to the window via a window motor. This motor will be the source of power to move the window up and down. The CCA and the window motor will need to be able to send and receive signals. Besides the window motor the CCA will also transmit a signal from the door locking system. Part of the home monitoring system is a door locking mechanics. The CCA will need to be able to send and receive signals from the door locking component, as it did for the window motor. So the total amount of I/O lines necessary from the CCA to the sensors, window motor, and door lock will approximately 7 I/O lines. There will be a need for at least one more I/O line to connect the CCA to the Server. Otherwise, the home monitoring system will not be able to connect the website. The CCA I/O lines will also need to be able to convert analog and digital signal interchangeably. The sensors' signals will be transmitted in one of these two formats. So the CCA will need this functionality in order to test the effectiveness of the sensors and how they transmit information to the website. The sensors individually should send a signal no greater than 3 to 5v. Otherwise, the system could malfunction and components could possibly burn out. When the signal from the sensors is being transmitted from the CCA to the server to be put on the website, the electrical output will be amplified. This means the electrical signal with go up in voltage from approximately 3 to 5V to about 10 to 12 V. In the end, the CCA will need an internal oscillator. The primary function of an oscillator in electrical systems is to convert a direct current energy source and convert the signal to a periodic varying output. This component will allow for the transmission of electrical signals of different strengths between components in the system there by reducing mechanical error.

The website will be supported by a server, so the homeowners have continuous access to the system when they are away from the home. The website will be developed in C# and then converted to ASP.net to be put onto the website. The server will need to transmit and receive information from the website. Whatever information the server receives from the website will be sent to the CCA to change the specifications of the sensors and other components. The best design will either have a microcontroller or a FPGA as part of the configuration in the CCA. It would be easier to program a microcontroller in the CCA versus a FPGA, because a microcontroller is more compatible with Java and HTML. Unfortunately the use of a microcontroller increases the cost of the design when compared to the use of an FPGA. In the long run the cost of the prototype will be higher; however, implementation and testing of the design will be more efficient. For the system the CCA will need to run continuously. The CCA is the brain of the system and without the system will be unable to communicate. FPGA can run on continuous power, but a microcontroller has a power saving mode. There are two parts to this design issue: 1.) Running a microcontroller on continuous power, 2.) If the microcontroller is not running how to prevent system errors.

There is not much a designer can do if a microcontroller is not built to run on continuous power. One option is to integrate into the CCA an optional power input port in USB format for example to give the CCA additional power and have the system run continuously. An alternative solution to having a microcontroller run on continuous power is to use ROM or Flash memory. These two types of memory are nonvolatile types of memory. This means if the system were to suddenly shut down, because it is not running on continuous power then the functions the system was performing will not be lost. As of right now this is the best solution to the power problem in a microcontroller. In today's economic environment, memory is relatively cheap and the implementation of ROM or Flash would not be difficult. The compared cost of the two solutions is the power supply would be more expensive than the memory. The biggest deciding factors in a decision like this will be cost and safety. It is difficult to say at this time how safe an optional power source component would be as part of the CCA design. So, the front runner is the memory, but this decision is not final at this point. The ROM will be designed with the above situation in mind; the registers inside the microcontroller should hold most of the current data being calculated.

Registers are a part of every FPGA. Registers act as locations of temporary storage of data inside a central processing unit (CPU). They are used when a program is being executed. A program is made up of instructions, and these instructions call upon register store information as the instructions are being executed. It can be inferred that registers are needed to run a program for a FPGA to perform a task. However, registers have other benefits beside this. Registers speed up the processing time of a program, because without register to execute a program a FPGA would have to refer to memory. Memory is a general term to be used in this sense to refer to random access memory (RAM) or ROM. It takes longer to access memory because the information is not readily available. To clarify, it takes the CPU time to go to memory, find where the data is located, and bring it back to be used in the program. In a situation where information needs to interpreted, calculated, and executed, the amount of registers available in the

microcontroller is critical. How many registers will be needed for the design, will depend upon the data length for information being transmitted by the system.

The server which will receive and transmit information from the CCA will either transmit at 32 bits or 64 bits of length. The server which will be used for the prototype will be 64 bits. Assuming the server transmit at this length, the register in the FPGA for the CCA will need to be of the same length. This design would allow for the most efficient format for information to be transmitted between the server and the CCA. However, there is a problem with finding a FPGA which can transmit 64 bits of information at a time. The problem is not so much that microcontroller which meets the 64 bit specification cannot be found, but that the microcontroller will not meet other specifications for the CCA. The best way to fix this problem of not being able to transmit at 64 bits is to use multiple FPGAs. For example, instead of using one 32 bit FPGA, use either four 16 bit FPGAs or eight 8 bit FPGAs. This method will allow the use of FPGAs without inhibiting the design specification for the other components which link to the CCA. The cost should be about the same, the only side effect of this change in design will be how the CCA will be laid out.

The CCA will have a set of push button switches. These parts are literally what the name entails, a set of buttons which are press able. Now, no matter how simplistic the functionality of these parts may be they do serve a purpose in the case of this project. Push buttons will be used for the testing and integration of the final design. If these components were not available, it would be difficult to complete the design process. In order to understand how to test the system the group will need to document where each component will be connected in the architecture.

The CCA will need to have passive components such as capacitors and resistors. Their primary function is to regulate the amount of voltage running through the CCA. By using these components as part of the design, the CCA will be able manage the amount of electrical energy being passed through the assembly. The end result will be a safer system and a more durable system. These components bought individually are relatively inexpensive and should be within budget. It is a practical idea to add these parts at the end of the CCA design. At first with the CCA, the objective is to acquire all of the necessary parts. For example, the amount of microcontroller or FPGAs going to be used in the design will be decided first. Afterward, a decision is made about how the components will be laid out in the design space. By this point the components have been decided upon and the laid out is made. Assuming the resistors and capacitors are available, it is now necessary to add them to fixture. Keep in mind the focus at this point in the design process is on implementation. In order to save time and redundancy this design should be tested in a safe environment. Preferably, this design needs to be tested in software development program to reduce the potential for error and to prevent accidents. This goes for all parts of the CCA which can be tested electronically. Otherwise, confidence is being put into doing something correctly in real time and that hardly ever works.

A table will need to be developed that will need to be compiled to show the ports of the CCA, the I/O lines, and what component the I/O line is connected to. This illustration is necessary for testing and documentation purposes. What needs to be done before this step is completed is the CCA architecture design needs to be finalized. This blueprint will be used as a map to interconnect all of the other devices. The architecture will be based on the size of the device and the materials which the device is made up of. At the current stage, the group is making decisions about what components will make up the CCA architecture. From that point, the components will be laid and a printed circuit board will be made of the design. At the current time, this is probably one of the most efficient and cost effective ways to implement the CCA architecture design. One of the potential problems with using printed circuit boards is if there are any sudden changes to the design of the circuitry. The printed circuit board will have to be remade in order to meet the new design requirements. However, this is a fact of life in designing physical components of this nature. The best method to avoid a problem of this nature is to perform as much preliminary testing through software applications. These software programs are not perfect, but they are the best bet toward preventing implementation woes.

Once the product has completed the development cycle, the focus will shift to esthetics. How well the prototype can be modified to be pleasing to the eye. The purpose of the enclosure is not just for esthetics, but also for protection. When the project is complete, the parts which make up the CCA need to be protected from the elements. Elements such as dust, rain, and mold. Another design related to the enclosure of the CCA is how accessible the device is. In case of an issue with the device or the component in this case, the CCA needs to be readily accessible at a moment's notice. So, a potential solution is to develop a latch system for the enclosure. A latch system for the CCA enclosure would be relatively inexpensive and it would still be pleasing to the eye. It fits well with the design necessities for the prototype.

There are some common components which are part of a traditional CCA, which will not be a part of this design. The reason these parts will not be a part of the design even though they may be beneficial for the features they encompass is because of cost. Every additional piece of the design which does not meet the specification requirements is a liability cost. One of the objectives for the development of the prototype is low cost. So, by acquiring parts which are not necessary there is additional time lost, which could be used toward more critical system. An example component which will not be necessary for this design will be erasable programmable read only memory EPROM. This component has the same capabilities as ROM, but is erasable and reprogrammable. So, instead of having ROM which takes up space and is not be used, this part resolves the problem. The construction of the CCA will be done in one of two places.

The CCA will be constructed in either the developer's home or in the lab. The lab will be the location where the soldering of pieces to the circuit board will be done. The lab is full of equipment necessary for the completion of the project. This equipment will be necessary to make critical decisions in regards to the progress of the design for the prototype. By using the available equipment for testing and development, the overall cost

for the prototype goes down. The equipment in the lab is not cheap and if the tools had to be purchased for the development it would force the team over the allocated budget for the project. A home location would be best used for the construction of the door and the window. For these parts of the project to successfully be implemented for the design, a need for tools such as a screwdrivers, hammers, nails, and screws is necessary. These components can traditionally be found in such a location.

4.1.2 Door Lock

The Door lock was chosen to be a standard deadbolt. The driving mechanism for the door lock was chosen to be two push solenoids. Thus the method of driving the door lock will be through external force. This means the safety that is built into the deadbolt to prevent this must be overcome. Once this is done the two solenoids must be positioned such that they effectively move the deadbolt the full length of its stroke. The solenoids that were chosen have one half inch stroke while the deadbolt has a one inch stroke. This means that the solenoids cannot be permanently attached to the deadbolt. It they were they would prevent the deadbolt from fully engaging or disengaging.

In the process of designing a method to overcome the internal safety mechanism, the deadbolt was closely examined. There is essentially a rectangular shell inside of which the bolt actually resides. Around half way down the length of the shell there is a cylinder straight through it. This has a gear grove which attaches to the key driver. This rotary cylinder is what the key turns to engage and disengage the lock. There is a shaft attached to the rotary cylinder. When the rotary cylinder is moved the shaft moves and pushes the deadbolt into the desired position. The two stages of the deadbolt as well as the transition stage can be seen below, Figure 4.1.2a.

Figure 4.1.2a - Deadbolt states

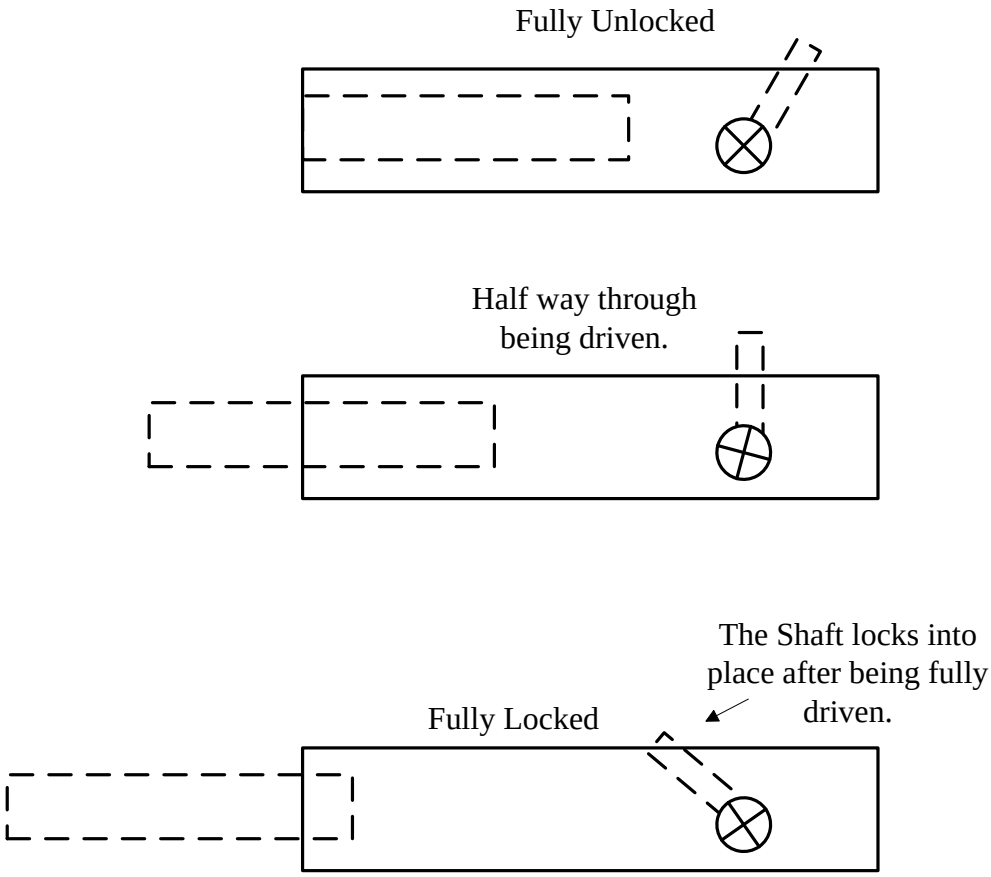

As previously stated the deadbolt has safety measures to prevent the bolt being driven without the key turning. The shaft has notches which fall into place making it impossible to move the bolt without the key. In order to bypass this built in safety measure J-B Weld will be used to lengthen the shaft and cover/fill in the notches. This will make it impossible for the notches to latch into place. The J-B Weld will need to be done in such a way that it does not prevent the bolt from fully disengaging/retracting. Furthermore by lengthening the shaft it will provide a convenient target for the solenoid plunger. The result of this modification can be seen in blue below, Figure 4.1.2b.

Figure 4.1.2b - Deadbolt Safety Modification

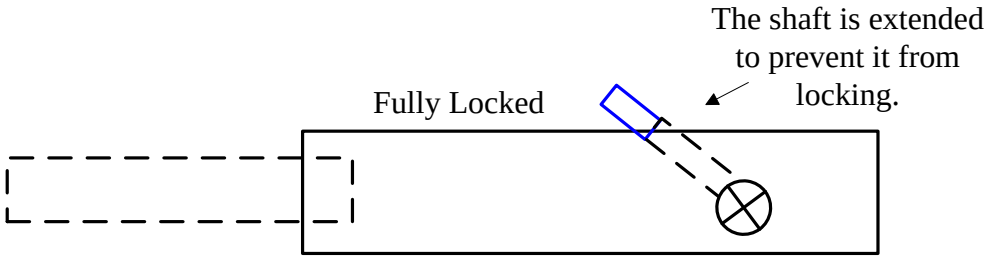

However it must be modified such that it is able to be driven into both its locked and unlocked positions. In order to drive the deadbolt electronically, solenoids will be used. One solenoid will be behind the deadbolt in the door. Its plunger will push on this shaft to drive it into the locked position. The other solenoid will be in the wall and will push the bolt itself back into the door. The locations of the solenoids can be seen in the figure below, Figure 4.1.2c. The objects outlined in blue are inside the door. The objects outlined in brown are inside the wall.

Figure 4.1.2c - Solenoid Locations

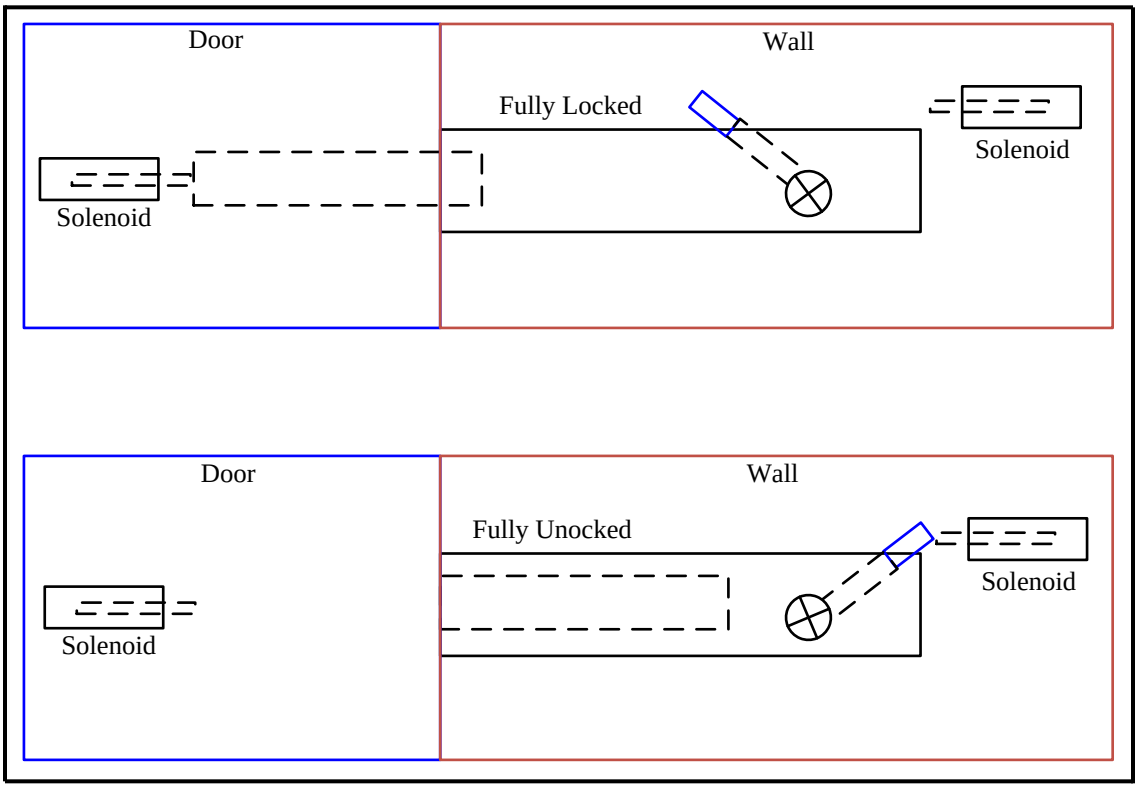

The solenoids will drive the deadbolt to the desired location. The stroke of the chosen solenoids is one half inch, while the stroke of the deadbolt is one inch. This means each solenoid will only be able to drive the deadbolt half way. This design depends on the spring inside the deadbolt. This spring will pull the bolt to the nearest full position. For example, if the deadbolt is between the halfway point and the locked position, the spring will push the deadbolt the rest of the way to the locked position such that it is fully engaged. Conversely when the deadbolt is between the half way point and the unlocked position, the spring will push the deadbolt the rest of the way to the unlocked position such that it is fully disengaged. This allows for the use of the chosen solenoids. The solenoids will drive the deadbolt physically to the halfway point and then retract. The internal spring will continue pulling the deadbolt to the desired location.

Because the door lock and therefore one solenoid will be inside the door, the driving signals for that solenoid will need to be brought inside the door. The CCA will be inside the wall. Thus wires will need to be run through the wall to the door, then through the door to the solenoid. The door lock will need a sensor to tell if it is locked or unlocked. This sensor will have wires that will need to be run to the CCA. Thus they will need to go through the door to the wall, then through the wall to the CCA. The method deemed safest and most efficient is that of running wires all the way from the CCA to the door lock. This length was estimated to be approximately eleven feet based on the normal size of a door and the approximate locations of the deadbolt and CCA within the wall. The wires will be brought out of the wall to a DB-9 around the top corner of the door just above the hinge. The reason the connector is necessary is the door may need to be taken off the hinges at some point during its lifetime. For example, if the homeowner is going to paint, they would need to remove the door. The connector makes this possible. From the connector's mate, the wires would go into the door where they will be run to the deadbolt sensor and the solenoid. The wires may be hidden within the chain/spring that would normally keep the door from opening too far. A diagram of the wiring can be seen below, Figure 4.1.2d.

Figure 4.1.2d - CCA to Door Wiring Diagram

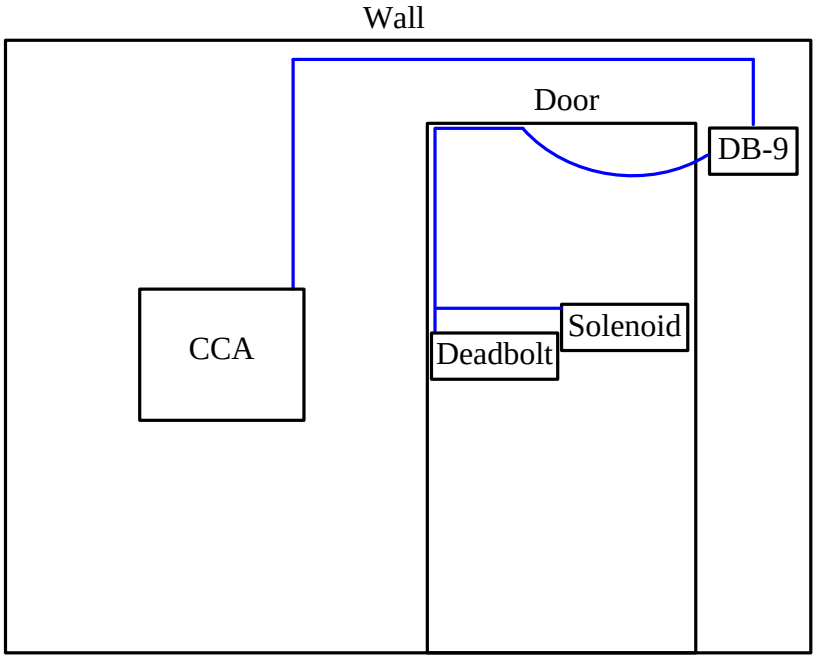

This length of wire along with the multiple connectors requires the line loss to be taken into account. Although the DB-9 and DB-15 pins have current handling capabilities of 5A per contact, they each increase the resistance of the line. The length of the wire although normally negligible, in this case must be taken into account. While driving moderate currents over eleven foot lengths, there are some inevitable voltage drops and line losses. The actual amount of line loss is calculated in the Power Design section. From this it was determined that 20AWG wire should be used. This will cause the circuit

to lose approximately 512mV while driving 2.4A at the solenoid. The connectors will cause the circuit to lose slightly more than this. This is acceptable as the solenoid is made to accept voltages within this range. This is the only place in the project where line loss and voltage drop are critical items.

4.1.3 Sensors

4.1.3.1 Temperature Sensor

As discussed earlier, this home monitoring system will have the valuable feature of opening and closing the windows automatically depending on the temperature reading inside and outside of the home. From all of the research for different types and formats of temperature sensors, the Sensirion SHT11 was chosen as best suitable for applications in this project. The Sensirion SHT11 met all of the system's requirements for a temperature sensor and more, and therefore was chosen for implementation into the system.

The Sensirion SHT11 is a 10 pin surface mountable integrated circuit chip. This temperature sensor can provide either a 12 bit or 14 bit temperature measurement, depending on the mode selected, and it also has upper and lower alarm trigger points that can alert the system when a reading is out of a specified range. SHT11 uses four of its ten pins, while the rest remain no connect. Pin one is the ground pin; pin two is for bidirectional serial data communication; pin three is for a serial clock; and pin four is for source voltage.

The system will contain two temperature sensors in its design, one inside the home and one outside the home. The two alarm registers will be used on both the outside and inside temperature sensors. The temperature sensors will be taking readings at pre-defined intervals and there will be temperature ranges set for both the inside and outside temperature sensors. For design purposes there are four cases the system will have to handle.

Case 1: If the inside temperature climbs above the set upper limit and the alarm is triggered, the system will be notified. The system will then obtain the reading from the outside temperature, the system will then check to see if the outside temperature is below the upper limit set. This is because the system will not want to open the window to try and cool down the house if the outside temperature is above the temperature inside the house. If the outside temperature is below the upper limit then the window is opened.

Case 2: If the inside temperature drops below the set lower limit and the alarm is triggered, the system will be notified. The system will then close the window automatically. The system will not check the outside temperature, because in this case the outside temperature is not important because the inside temperature has dropped too low and the window will be closed to retain heat inside the home.

As it can be seen from the cases above the inside temperature sensor will have upper and lower limits to specify the range of the desired temperature inside the home. The outside temperature sensor will only have a set high limit, to mark the temperature point at which it is too hot to open the window inside the home.

Because the Sensirion SHT11 is leaner by design, the manufacture gives a conversion, to convert the measured temperature reading to a more digital output. Figure 4.1.3.1a and Table 4.1.3.1a show the given formula and values corresponding to different environments.

Figure 4.1.3.1a - Sensirion SHT11 Temperature Conversion

$$T = d_1 + d_2 \cdot SO_T$$

Table 4.1.3.1a - Sensirion SHT11 Temperature Conversion

VDD	d_1 (°C)	d_1 (°F)
5V	-40.1	-40.2
4V	-39.8	-39.6
3.5V	-39.7	-39.5
3V	-39.6	-39.3
2.5V	-39.4	-38.9

SO_T	d_2 (°C)	d_2 (°F)
14 bit	0.01	0.018
12 bit	0.04	0.072

For this project the Sensirion SHT11 will be provided 3.3 V for operation and will use a 14 bit output. So, referencing the formula and tables above, the d_1 constant was set to -39.4 because of the 3.3V and using Fahrenheit. And the d_2 constant was set to 0.018 because of using a 14 bit output and Fahrenheit.

For mounting purposes, the inside temperature sensor will be mounted directly to the printed circuit board of the system. For this project this is acceptable because the model of the home will small and the PCB will be inside the mock up. For real world implementation, it would be more effective and practical to move the sensor to the center of the home. The outside temperature sensor will be located right outside of the window. The temperature sensor will be mounted onto a small board enclosed in a box to prevent damage.

4.1.3.2 Humidity Sensor

The need for a humidity sensor has been explained above and is very important. The main goal of the implementation of a humidity sensor in this system is to protect the home from water when the window is open in the home. For this implementation the project chose the Sensirion SHT11 Humidity Sensor for the system. The Sensirion SHT11 is a 10 pin surface mount integrated chip. The SHT11 is in fact a humidity and temperature sensor combined, but for this phase of the project it has been determined to

only use the humidity function of the sensor and use the previously selected temperature sensor, for the project as they both bring different features to the overall system.

The SHT11 is a fully calibrated, low power consumption, and digital output humidity sensor. In operates in a humidity range of 0-100 % RH, with an average accuracy of plus or minus 3 %RH. The SHT11 also operates in a voltage range of 2.4 V to 5.5 V with a recommended supply voltage of 3.3 V. On average the humidity sensor consumes about 150 µW and communicates on a digital 2-wire interface with the system. The pin breakout is shown below in Table 4.1.3.2a and is as follows: pin 1 is for the ground wire, pin 2 is the data line for the serial date, pin 3 is for the serial clock, pin 4 is for the source voltage for the device, and all other pins are no connect pins.

Table 4.1.3.2a - Sensirion SHT11 Pin Layout

Pin	Name	Notes
1	GND	Ground
2	DATA	Serial Data
3	SCK	Serial Clock
4	VDD	Source Voltage
NC	NC	No connect pins

As mentioned earlier the recommended voltage supply should be around 3.3 V, in order to have optimal power consumption for the sensor. The system will most likely have a voltage close to this for this component. One sensor will be used in this system and will be located directly outside of the window. Unlike the temperature sensors the system will only need one because the purpose of the sensor is only to detect when it is raining outside, so the system will know to shut the window. The humidity sensor will be constantly reading the humidity level of the air when the window is open and for this system there will only be one case for the humidity sensor to handle.

Case 1: If the level of water vapor in the air is above the pre-set acceptable level, then the system will close the window.

The SHT11 humidity sensor will communicate with the system using the data line and the clock line. By varying the data line and clock line inputs different commands can be sent to the humidity sensor. Commands for the sensor are made up of 8 bits. The first three bits of the command are address bits and for this sensor only ‘000’ is the allowed address bits. The last five bits are command bits, with a total of 5 pre-determined commands for the sensor, including: measure temperature, measure humidity, read status register, write status register, and a soft reset command.

After the system sends the command for the humidity reading the sensor will take the reading and then send the system either 12 bits or 8 bits of data, depending on the user configuration for resolution. For this project it has been decided to use the resolution of 8 bits, because the degree of accuracy of 12 bits is not needed for the system and by using 8

bits the sensor will perform faster. Once the data is received the manufacturer recommends modifying the data slightly to account for the non-linearity of the humidity sensor. So once the system receives the data, it will then apply the formula in Figure 4.1.3.2a to achieve the full accuracy of the sensor and obtain the relative humidity. The formula is manipulating the sensor humidity readout, SO_{RH}, with several coefficients C_1, C_2, C_3. As mentioned earlier there will be a pre-determined acceptable humidity level. If the reading of the current relative humidity is above that level, then the system will close the window due to the potential of rain. The actual acceptable humidity level is a little more difficult to determine. In theory, when it is raining the humidity outside should be 100%, but this is not always the case. Due to precipitation and other effects of the atmosphere and environment the relative humidity at ground level when it is raining is not 100%. Because there can be a wide range of possible values of the humidity reading and still have the possibility of it raining, the system will have an acceptable level that is relatively low. To start off, with the system will have a level of around 65% RH for its humidity maximum reading, and then from there the level will be adjusted after testing.

Figure 4.1.3.2a - Sensirion SHT11 Humidity Conversion

$$RH_{linear} = c_1 + (c_2 * SO_{RH}) + (c_3 * SO_{RH}^2) \quad \textit{(\%RH)}$$

The humidity sensor will be mounted on a small board outside of the window in a box enclosure that has acceptable openings while still preventing the chip from getting wet. There will be four wires that run from the chip back to the system located inside the home. These wires will be for the ground in, data pin, clock pin, and the source voltage pin for the humidity sensor.

4.1.3.3 Window Sensor

The system's need for a window sensor was derived from the functionality of an automated window, as explained above. Along with the obvious reasons for security purposes, the need for a window sensor is very important to the system as well. The window sensor will give the system a means of telling whether the window is open or not. The system could try and do this alone without a sensor, but there are cases when the system may not have control. For instance, if the window is opened manually by the user at home, then there is no way for the system to know that and will still think that the window is closed. Also, the loss of power could have the ability to disrupt the system's perspective of the window, so it is clear that a window sensor is needed for the system to operate efficiently.

From research above, the Assemtech PSA 240/30 was chosen as the system's window sensor for implementation. The PSA 240 is a reed proximity switch sensor, which operates by applying a magnetic field. This reed proximity switch is normally open, which means that when a magnet is not in close contact the switch remains open. The reed proximity switch works by housing two contacts on a ferrous metal. When a magnet

is brought close to the switch, the magnetic field pulls the contacts together, because of the ferrous metal, and the circuit is complete.

The Assemtech PSA 240 consists of two components, the switch and the magnet. For this system, the switch will be attached to the inside frame of the window of the home. And then the magnet will be attached to the inside of the window itself. The magnet will be placed in the position that is directly next to the switch when the window is closed. This reed proximity switch has an operating distance of 0.315 inches, which is the maximum distance that the magnetic field will still effect the switch, so the switch and magnet will have to come very close when the window is closed. The switch then has two wires that will be ran back to the printed circuit board of the system inside the home. From these two wires the system will then be able to detect when the circuit is open or closed, reporting the current state of the window.

This reed proximity switch has a switching current of 0.5 A, which is how the system will monitor the state of the switch. By connecting both leads from the switch, the system will monitor the circuit for a current. When the system detects a current it will then know that the switch is closed and therefore the window is closed. Being able to detect a current shows that the two contacts inside the switch were closed and there is a complete circuit. Table 4.1.3.3a below, shows the style of the switch, the switching current of the switch, the operating distance of the switch, and the contact resistance of the switch. The contact resistance for this switch is only 200 mΩ maximum, which is not very large so it will not affect the circuit.

Table 4.1.3.3a - Assemtech PSA 240/30 Specifications

Contact Form	Normally Open
Switching Current	0.5 A
Operating Distance	8 mm (0.315 in)
Contact Resistance	200 mΩ

4.1.4 Window Motor

Starting off with a design for the automatic window should always begin with the easiest component. The window is something that can either be made (for a model design) or bought. The window has to be able to open so that the fresh air can come into the home. Having a vertically sliding glass window would be preferred so that it can easily open and shut with force applied to either the top or bottom of the window. Every window should have a screen so that nothing besides air can come into the house. The window will run on a track that will allow it so move smoothly up and down. This window should have the ability to stop so that when the window is fully open, it will continue to stay open. Even with the stopping ability the window should be easy to shut with the power of the motor. The window should be surrounded by a frame that can support the

weight of the sliding glass so that it does not collapse in when the motor is trying to slide the window open.

The motor for the window will be positioned to the left of it. It will be fully enclosed within the wall so that it is not seen. The motor will be behind the drywall and will be supported by the left beam for the window. The motor will have a casing to protect the gears and will be secured down. It will be strapped to the left beam of the window by either a brace that can go over the motor and hold it down or by a piece that will be placed below the motor so that it can be screwed into the back of the motor and to the beam to the right to secure it. If there is a piece of wood below it that will screw into the back of the motor to brace it, then the wood will be attached to the beam at the left part of the window at a ninety degree angle with another piece of wood below it at a forty five degree angle so that it is well secured. There will be a gearbox that will be attached to the end of the shaft of the motor so that it extends above the top edge of the window. The gearbox will be about a an inch thick so that it is large enough to withstand the force applied to it and fit around the motor. At the end of the gearbox is a shaft that supports the weight of the sliding window and allows it to be moved up and down depending on what needs to be done.

This gearbox will be will use the shaft to support the window with pins spaced out that will wind up the wire. . The pins need to be supported at a proper distance apart by a spacer. The spacer will allow the pins to have wiring wrapped around them without pulling them together. The wiring will be connected to the first pin so that when the motor turns then pins rotate around one another and wind up the wiring. This wiring need to be strong enough so that it can stand the tension that will be placed on it when raising and lowering the window. It also needs to be small enough so that they are not as noticeable and so that when they rotate around the pins that are connected to the gearbox, it does not fall off the pins and start wrapping around the driveshaft. The holes that the wiring are going through to attach to the window have to be big enough so that the wiring can fit through and have some movement so that it does not catch on the sides. One end of the wire will be attached to the top of the window and in the center for pulling it up. The other end will go through a pulley system and back to the pins that are connected to the gearbox. The wiring will loop to the top of the frame, back down to the window, back up again and then to the gearbox in a pulley system format. This is to reduce the amount of force needed from the motor. The wire will need to be in a location that hides it from plain sight from a user that is outside of their house. The wire will be connected to the window at one point, at the top of the window. It will be connected by a hook that is screwed into the top of the window. Since the wire is a constant length, it will remain taunt so that when the motor is working there will not be any slack in the lines.

The motor needs to be strong enough to be able to move the window the way that it is supposed to without any stalls. The motor will have a torque that contains a force strong enough to raise the window. This wire has to be attached to the motor strong enough so that it does not break off when trying to lift the window up. Even if the motor is strong enough to lift the window, the wire or connection between the wire and the pins may not

be strong enough to hold the weight of the window. Along with this the motor has be quiet enough so that it will not be too much of a disturbance when running. It will be an electric motor so that it is small enough to fit in the wall and quiet enough for the home owners. The motor will be connected by two electrical wires so that it can have a current running through it to power it. The wires will then be connected to a circuit board that will control all of the functions of the window.

This circuit board will control and power the different functions of the window. The wiring will have a switch between the two so that the power can switch directions. This allows the circuit board to place the power to one of the wires so that the motor will turn clockwise and open the window. Then the circuit board can place the power to the other wire so that the motor can turn the window counter clockwise and close the window. These wires have to be unexposed by making sure that they are enclosed in a casing so that the metal within the wiring does not touch another. This will account for the safety of the home owner because if the wiring is exposed, it may cause a spark large enough to cause a fire within the walls. The wiring is connected to a circuit board and then to a server which allows the home owners to retrieve access to the information from a computer. It will permit the home owner to remote access to the circuit board through a web based program. This program will show what the status is of the window and what position the window is in. It will also give them a choice to either lower or raise the window. When the home owner tells the circuit board to raise the window, the circuit board will then send power to the wire connected to the motor that will create a clockwise rotation on the shaft. This will then open the window and create a scenario in which the motor has completed its task in opening the window.

The image in Figure 4.1.4a shows how the upper portion of the window should work. The motor is sitting on the side of the left frame, and is on the left side of the picture attached to and supported by the gearbox. This support holds the motor in place while it turns the gearbox. The gearbox has the three pins attached to it so that they can pull up the window when the motor is turning clockwise. This image shows the different parts to the window. Figure 4.1.4a only shows the mechanics for the upper portion of the window and does not contain the bottom frame so that it is easier to understand how the wire is attached without covering it up. This window is also shown in the open position.

Figure 4.1.4a - Upper Portion of Window

The lower portion of the mechanics behind the window is shown in Figure 4.1.4b. This diagram shows how the lower portion of the window is attached and how the frame and wheels work. The lower portion of the window will not contain a motor because it would waist more energy than needed. The window is shown as being closed in this image so that the difference in position can be seen in both images.

Figure 4.1.4b - Lower Portion of Window

4.1.5 Power

The Circuit Card Assembly must convert and regulate its own power. Thus there is a The Circuit Card Assembly must convert and regulate its own power. Thus there is a section of the CCA specifically for this. It is the Power Distribution Unit (PDU). The PDU has one main task, to convert 120Vac 60Hz to the DC voltages required by the CCA. The PDU will include one transformer, one full bridge rectifier, six voltage regulators and several assorted capacitors, resistors, inductors, and diodes. The transformer will not be mounted on the CCA but will be mounted to the chassis next to the CCA. The transformer has wire leads that will be connected to the 120Vac 60Hz standard house power. Using standard house power will make it easier to integrate into the standard home. The transformer will connect to the CCA via a DB-9 connector. The DB-9 attached to the transformer will be female. This is standard practice because it has the voltage and current. This will make it easier to separate the CCA and transformer, such as in the case of repairs. The DB-9 will not limit the current in this case as each contact has a maximum current rating of 5A. The transformer has a 3A maximum current handling capability, which will not exceed the maximum current rating of the DB-9 contacts. The transformer will convert 120Vac 60Hz to 37Vac 60Hz. This will then be fed into the CCA via the DB-9. All the rest of the power management circuits and components will be on the CCA in the PDU section. The 37Vac will go into a full wave bridge rectifier. The rectifier has a maximum voltage of 50V and a maximum forward current of 4A. Again the required voltage and current do not exceed the maximum ratings of the part. The output of the rectifier will go into a large holding capacitor (1000uF) and then to

filtering capacitors. These will be two 15uF and a .47uF (50Vmax) capacitors in parallel between Vout of the rectifier and ground. The Vout node of the rectifier (the 37V node of the capacitors) will be connected to the Vin pin of the 12VDC voltage regulator. The 12V regulator will have an inductor in series with the Vout line which will go to the direct feedback line. There will be an 180uF (16V) capacitor and a high current schottky barrier rectifier between 12V (Vout) and ground. There will be a .01uF capacitor between the Vout line and the Boost line. There is an ON/OFF pin which will be attached to a switch. When engaged the switch will short the pin to ground. This will not allow the voltage regulator to turn on. When not engaged, the ON/OFF pin will be left floating. This will allow the circuit to turn on as long as the input voltage (120Vac) is supplied. This 12VDC output will be referred to as 12VDC #1. The main use of 12VDC #1 is to power the other voltage regulators and a level translator. A schematic of the 12V voltage regulator can be seen below, Figure 4.1.5a.

Figure 4.1.5a - 12V Voltage Regulator Schematic

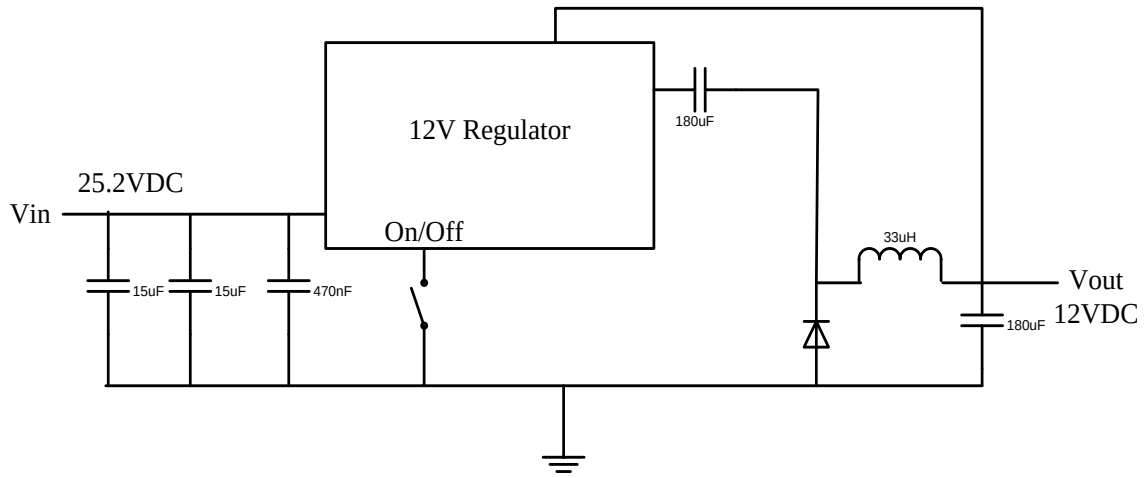

There will be an identical voltage regulator in parallel with 12VDC #1. It will attach to the fully rectified and filtered 37Vac line. It's output will be 12VDC at 3A (max). This will be 12VDC#2. Its only purpose is to provide power to the solenoids and the motors. The only difference between the circuit for 28VDC #1 and that of 28VDC #2 is that the On/Off pin will be attached to a ground via a FET instead of a switch. The last place the 37V line will be used is on the 3.3VDC voltage regulator for the window motor. It will have an almost identical setup to the 12VDC regulators except the inductor and filtering capacitor values have changed. The on/off pin will be tied to the on/off pin of the 12VDC #2 regulator as they will be controlled together.

The CCA requires several other voltages. These will be created using 12VDC #1. 12VDC #1 will be attached to the Vin lines of the 5V voltage regulator and the 3.3V voltage regulator. Both will have a high current schottky barrier rectifier between the Vout pin and ground. They will both have a 33uH inductor in series with the output line and an 180uF capacitor between that and ground. They will have a .01uF capacitor between the

Vout pin and the boost pin. Finally both will have direct feedback from the final output voltage (the positive terminal of the 180uF capacitor) to the feedback pin. Both will have the ON/OFF pins floating. This will allow for the parts to start regulating as soon as 12VDC #1 comes up. A schematic of a 5V or 3.3V regulator can be seen below, Figure 4.1.5b.

Figure 4.1.5b - 5V or 3.3V Voltage Regulator

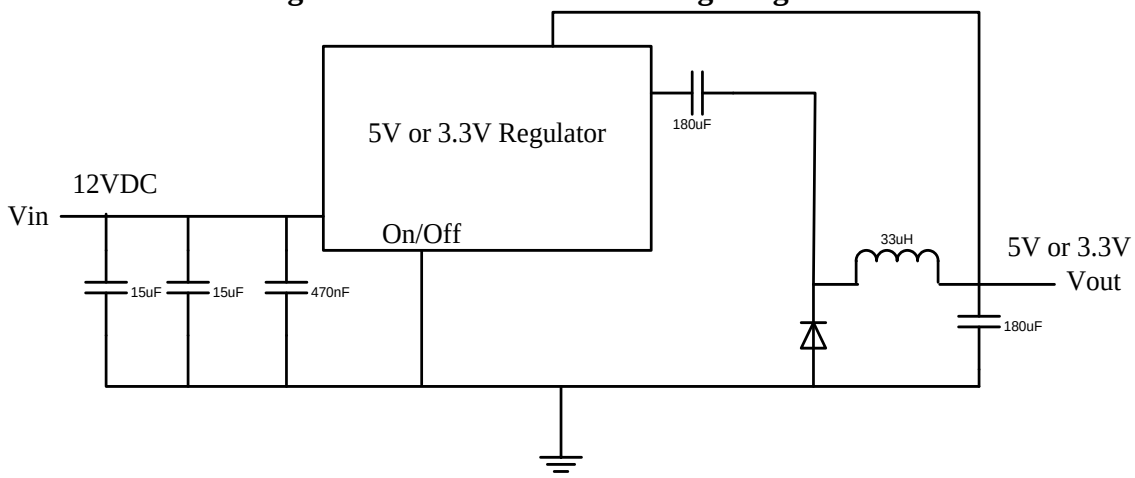

The 1.2V voltage regulator is not from the same family as the other regulators in the PDU. Thus it has a different layout and schematic. The main difference is that it will not be powered off 12VDC #1 but off of the 3.3V line. This is because the 1.2V regulator cannot handle input voltages above 5.5V. The 1.2V regulator has an enable pin which must be tied to Vcc. This will allow the regulator to begin working as soon as power is available. It will have 4.7uF filtering capacitors on both the input and the output. It will also have a .47uH inductor in series with the output. Both 1.2V and 3.3V will power the FPGA which requires very low noise power signals. As such there will be filtering capacitors on the 1.2V and 3.3V lines right next to the FPGA. A schematic of the 1.2V regulator can be seen below, Figure 4.1.5c.

Figure 4.1.5c - 1.2V Voltage Regulator.

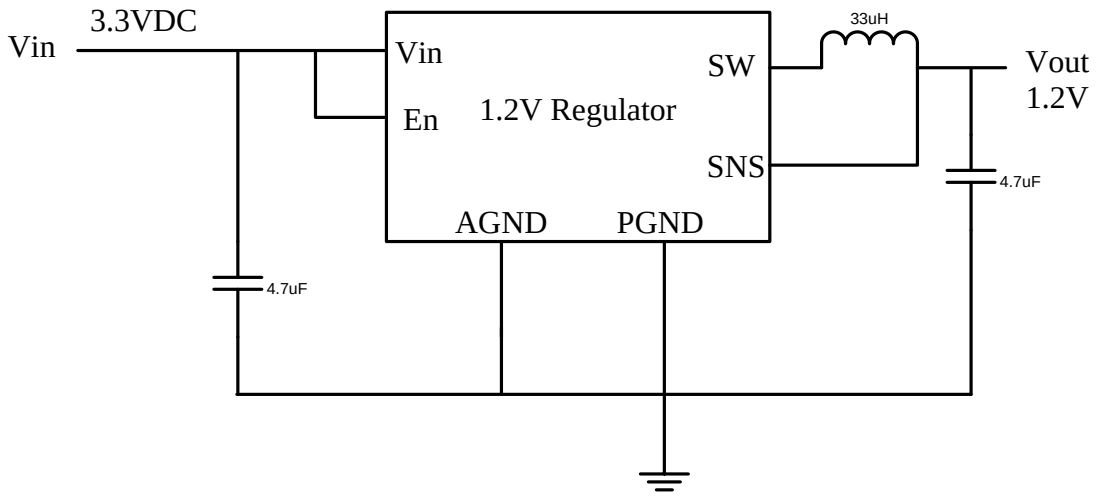

In summary the PDU will take in wall power and will go through a transformer dropping from 120V 60Hz to 37V 60Hz. It will go through a Full-Bridge rectifier and then into two 12V voltage regulators with capacitor filters on the inputs. The first 12V regulator will feed ICs, the 5V and 3.3V regulators. Both of those will feed ICs although the 3.3V regulator will also supply the 1.2V regulator which itself will feed ICs. The second 12V regulator and the second 3.3V regulator will be powered off the 37V and will power the solenoids and window respectively. This can best be seen in the block diagram below, Figure 4.1.5d.

Figure 4.1.5d - PDU Block Diagram

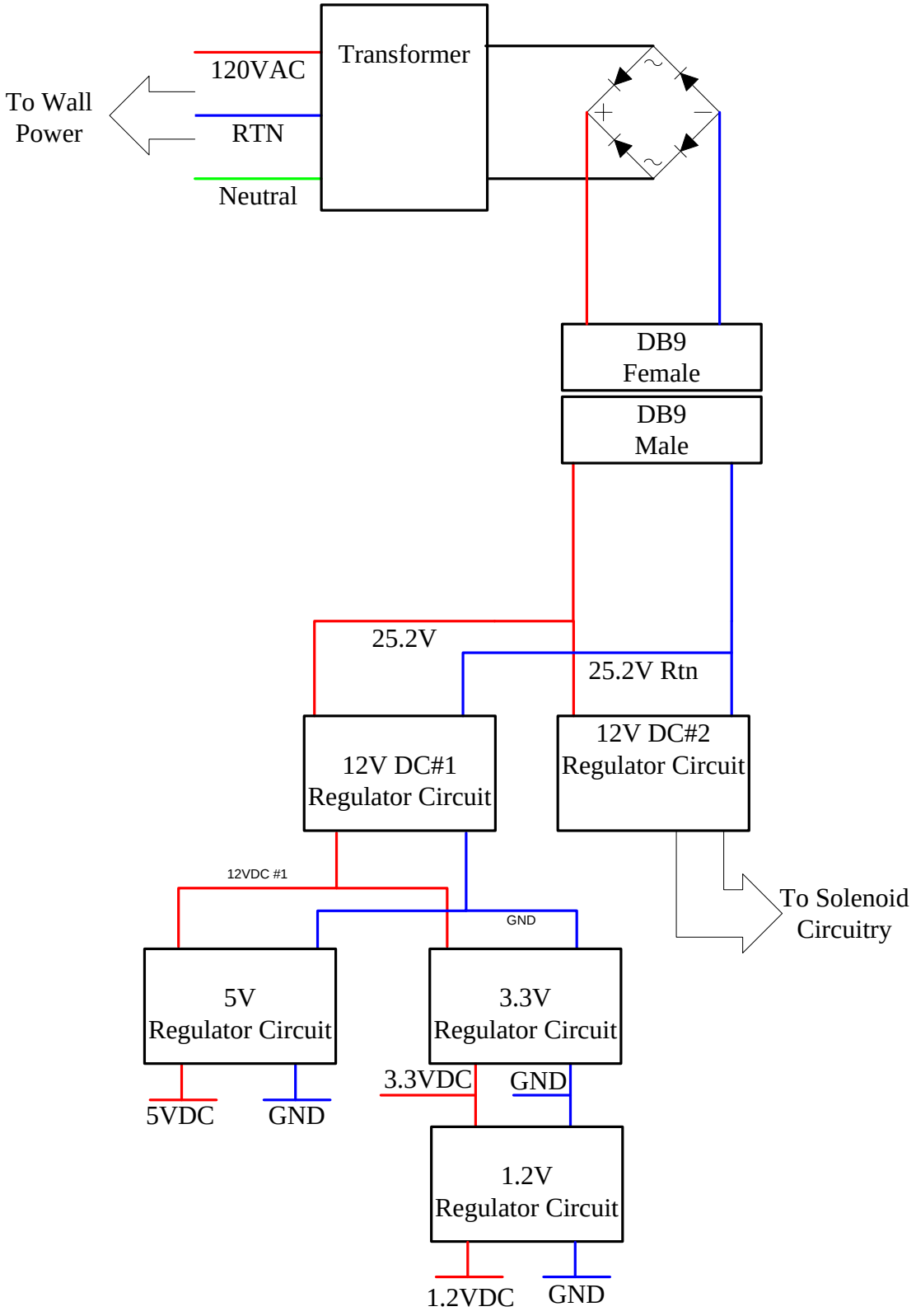

Power will be routed to all ICs that require their specific voltage. 12VDC #2 goes to two FETs controlled indirectly by the FPGA. The control lines for the FETs will come from the FPGA at 3.3V and go through a level translator to become 12V. This will ensure the on resistance of the FET is at a minimum. These FETs are the drivers for the solenoids. Although the FETs will be connected to 12VDC #2, the level translator will be connected to 12VDC #1. This will ensure the level translator is not interrupted if 12VDC#2 is pulled down during one of the pulses. The output of the level translator will be tied to the gates of the FETs. The FETs will have 5Ω 20W current limiting resistors. This will limit the maximum current to 2.4A. This is for short circuit protection. The output of the FETs will go to a female DB-9 on the CCA. Similarly for the window driver the signals to drive up and down will come from the FPGA. They will go through a 3.3V to 12V level translator and then to the FETs. The widow driver FETs will have current limiting resistors similar to those of the solenoid drivers. However these resistors will be 5Ω 1W resistors. For clarification, the solenoid and window driver circuit can be seen in the figure below, Figure 4.1.5e.

Figure 4.1.5e - Solenoid/Window Circuit Block Diagram

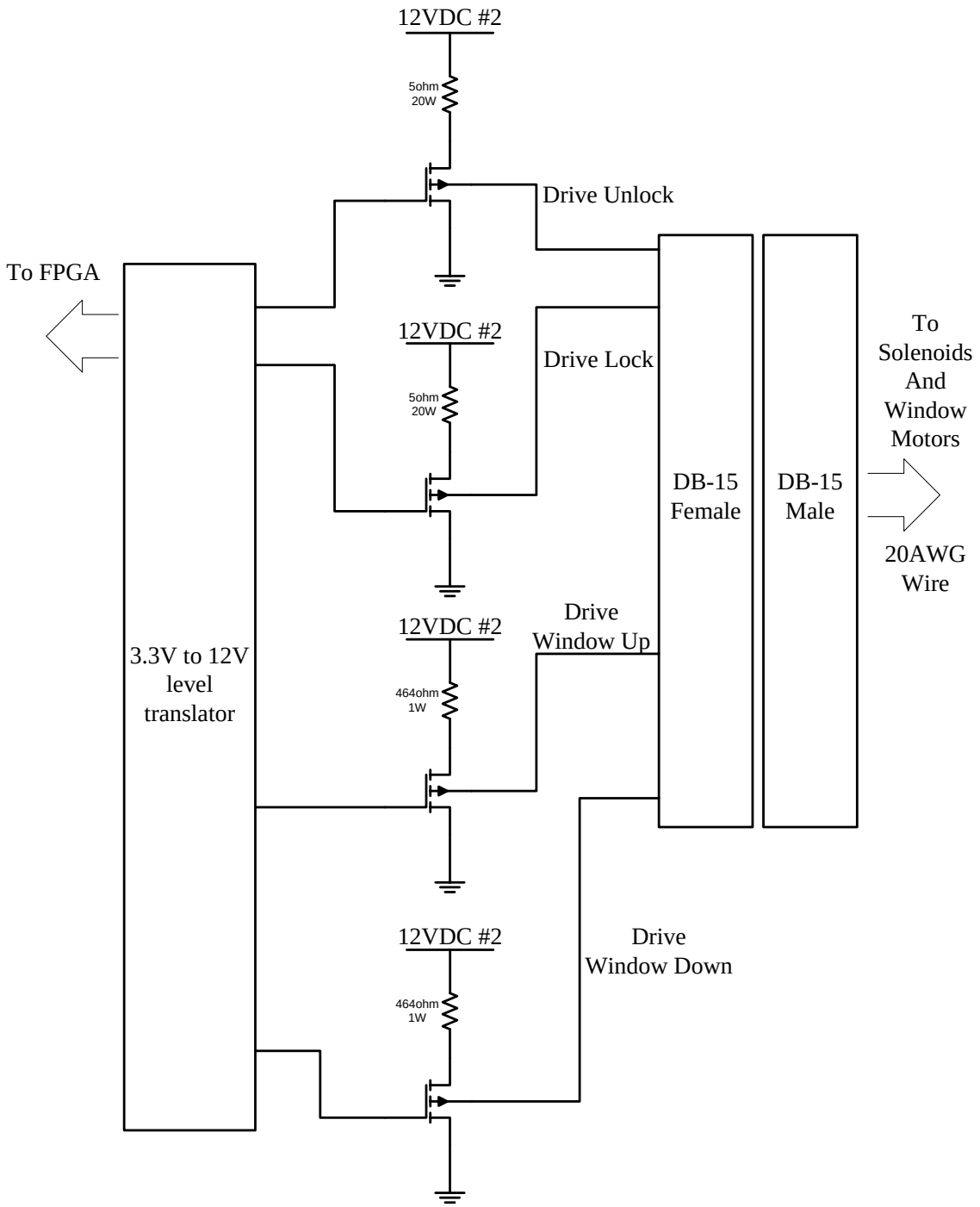

Special consideration will need to be taken when routing 12VDC #2. The current draw on this line will approach 2.4A and as such the traces will need to be wide/thick enough to handle the current load without burning up. These FETs and the connector will be placed

close to the PDU section so that long traces are not required. This will reduce line loss. The DB-9 male that will attach to the CCA will have 20AWG leads connecting it to the solenoids. The choice in the gauge of wire is dependent on the voltage current and length of the wire. With the solenoid that drives into the locked position the voltage drop should be negligible, as this solenoid is placed close to the CCA. However the second solenoid will be placed inside the door to push the deadbolt back into the unlocked position. This will require lengths of wire approximately 10.5 ft. long. At 10.5 ft. there should be approximately 106mΩ of resistance each way. 20AWG wire should have approximately 512mV of voltage drop at the load (solenoid). This is acceptable for the solenoids chosen. Choice of gauge wire is based on calculations of line loss. The results of the line loss calculations can be seen in the table below, Table 4.1.5a.

Table 4.1.5a - Line Loss During Solenoid Pulse

AWG	Ohms per 1000 ft.	Ω each way	mΩ Total	Voltage loss at 3A	Voltage loss at 2.4A
22	16.14	169.47	338.94	1.01682	0.813456
20	10.15	106.575	213.15	0.63945	0.51156
18	6.385	67.0425	134.085	0.402255	0.321804

It was decided that the analog and digital signals should be kept separate on the circuit. When laying out the PCB, a section was set aside for the analog chips and a separate section was set aside for the digital chips. Although each should have its own power supply it was deemed too costly. The analog ground and digital ground should be at the same level but isolated. An opto-isolator will be used for this purpose. This highly reduces the noise on the analog half of the circuit. External noise can still interfere however the noise caused by the coupling of the digital signals is greatly reduced. The noise on the digital half is not as important as the digital circuitry operates within ranges for High or Low. Filtering capacitors will be placed between power and ground right at the power pins of noise sensitive components. For example, the analog to digital converters will have a small, high frequency, capacitor between power and ground physically close to the power pin of the IC. To keep the analog ground plane and digital ground plane separate the analog to digital converters will need to be placed on the border of the two ground planes. There are isolated analog ground pins and isolated digital ground pins on the analog to digital converter ICs.

4.2 Software Design

4.2.1 Server

To be able to interface between the home monitoring system and the online tools the project plans to provide, it is obvious that a web server is needed. From the research of four different web server programs, two obvious ones stood out from the rest, the Apache

web servers. Even though both of the Apache web servers are possibilities and incorporate most of the functionality the system will need, one stood out with a significant advantage to the system and its design and implementation. For the initial implementation the Apache Tomcat web server was chosen. The main reasons the Apache Tomcat server stood out from the Apache HTTP web server, was its ability to handle and deploy Java Servlets and Java Server Pages (JSP) very easily. As discussed earlier, the design of the graphical user interface will be written in the Java programming language, so having the ability for the server to implement Java Servlets and Java Server Pages is a huge bonus for the project. Another bonus regarding the Apache Tomcat web server is because it implements Java code, it can be incorporated to be used directly in a Java platform program.

For implementation into this project, there will be a few topics discussed in the web server design and implementation, including: platform, user authentication, real time, dynamic content, and security. Beginning with an overall level, the Apache Tomcat server will be run on a Windows operating system computer. It will be installed on the primary drive of the computer and that is where it will run from. As mentioned earlier, an advantage of the Tomcat server is its implementation abilities in a Java platform. For this system the computer will be running a Java platform from Eclipse, which is an open source community of software. Eclipse has the functionality of adding web servers and being able to run them from it framework. For this project, the Apache Tomcat server will be added into Eclipse where it will be run from. This is a great advantage because all code will be written in the Java Eclipse platform. Also, by making a connection between Eclipse and Tomcat Eclipse will be able to view the layout of the server and will be able to update the Java Servlets and Java Server Pages very easily.

Even though the Tomcat server will be implemented through the Java Eclipse platform, it is still setup and physically ran from the primary drive of the computer. The Tomcat server consists of three main components: Coyote, Catalina, and Jasper. The Coyote component does mainly all the work that is associated with how a web server works. Coyote is the web server's HTTP connector component, which uses HTTP 1.1 protocol. Its main responsibilities is forwarding and sending back requests from a client computer. The Catalina component of Tomcat is the servlet container. Catalina handles all of the Java Servlets that are displayed on the web. And the final component of the web server is Jasper, which is Tomcat's JSP engine. The functionality of Jasper is to take Java Server Pages and compile them into Java Servlets, which can then be handled by the Catalina component of the web server. The overview of how the Tomcat web server works is, first a request from a client is received by Coyote which then forwards the request to the Catalina component. The Catalina component then works with the Jasper component to acquire the correct pages to display, and then Jasper compiles the correct pages into servlets and sends them back to Catalina. Catalina then sends them back to the Coyote component which then sends the response back to the client computer. See Figure 4.2.1a below for an overview of the Apache Tomcat web server.

Figure 4.2.1a - Apache Tomcat Overview

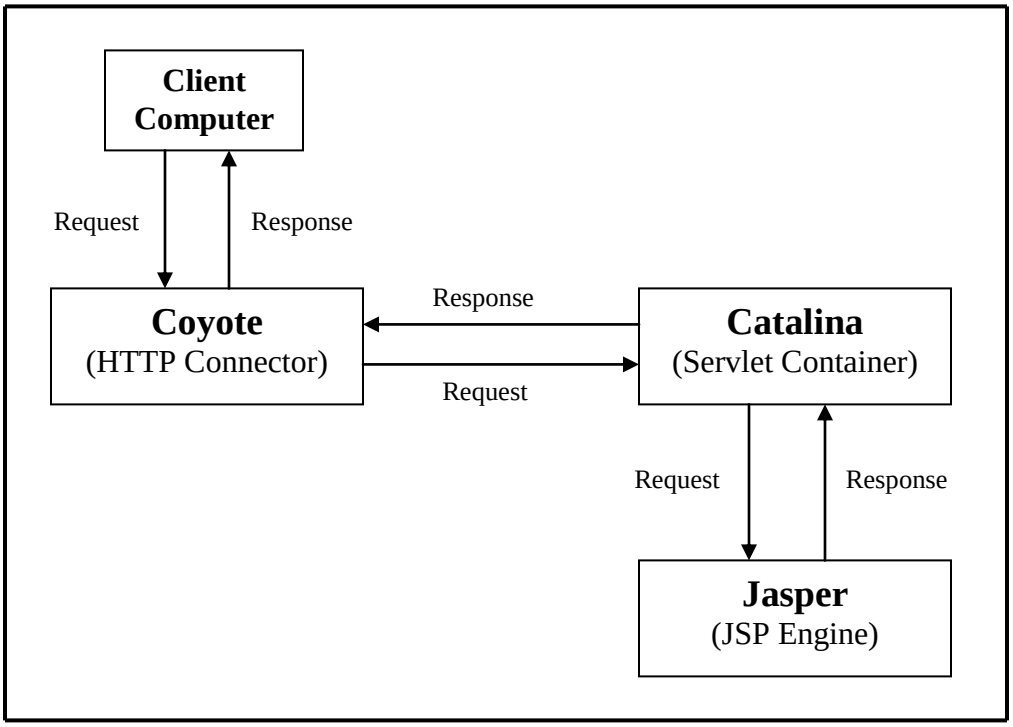

The Tomcat web server will also be configured for user authentication. The server will be setup to require a username and password when trying to view pages on the server. This is required because only valid users should have access to unlock their door or open their window, due to the security risks of doing those commands. Tomcat implements user authentication by using realms, which basically refer to a database that contains usernames and passwords along with roles associated with each user. This realm can be placed in several different places in the server files, depending on what components are to be protected. For this system, the realm will be placed in the engine element of the server, which will mean that the realm will be shared across all of the server's web applications. Because this project is for a prototype implementation, the server will implement the user database realm. The user database realm uses an XML file that stores all of the usernames and passwords and their corresponding roles on the system. Figure 4.2.1b below shows an example user database realm XML file. When a user first attempts to access the website the server will call the "authenticate" method of the user database realm which will compare the entered username and password with the users file. Once a user is validated the Tomcat server keeps the user's authentication for the duration of their login unless their session times out. When the Tomcat server is first started it loads the user database file, so if there are changes made to the users file after startup, they will not take effect until after a reboot of the server. [16]

Figure 4.2.1b - Example User XML File

```
<tomcat-users>
    <user name=”admin”  password=”tomcat” roles=”admin” />
    <user name=”user 1”  password=”tomcat” roles=”user” />
    <user name=”user 2”  password=”tomcat” roles=”user” />
</tomcat-users>
```

Apache Tomcat server can also implement dynamic content. It does this by using a feature called, SSI (Server Side Includes). These are directives that can be placed in HTML pages which will be evaluated even when the pages are being served to the client. Using SSI is a benefit because it lets you add dynamic content to HTML pages without having to serve the entire page again. For this implementation, the server will be setup implement the servlet based SSI support. This will be done by using the SSIServlet class in the Catalina directory of the web server. These servlets will then be mapped to the unique URL patter of “*.shtml”. SSI works by reading directives in HTML files and executing commands associated with them. These directives are used by adding them into HTML documents as an HTML comment. Supported directives include: config, echo, exec, include, fsize, and set. The directive that will be used the most by the system will be the exec and echo directives. The system will have exec directives in the html pages to execute certain commands; for example, locking the door or opening the window. The system will also implement several echo directives, which will be used to return values of variables to the web pages; for example, displaying the current status of the window or door lock or to display the current temperatures inside and outside of the home. The server also contains many variables that can be used to return generic information, which might be implemented later if needed; these variables include: date, time, document name, the HTTP host, the path information, the server name, the name of the user, and many more. [17]

The last important design of the server will include the security protection of the web pages. For security purposes the Tomcat server implements SSL, Secure Socket Layer. A brief overview of SSL is basically to ensure a secure connection between a web server and a web browser. Data is encrypted by the web server and then sent to the web browser where it is decrypted and then vice versa for communication back to the web server. This secure connection requires a certificate that validates each party. Tomcat has tools that create a certificate file and a configuration file. The Tomcat web server then uses that certificate in creating secure connections to any client trying to connect to the web server. For this project a certificate and configuration file will be generated using the Tomcat server tools to ensure a secure connection between the server and the client computers.

But, because the group decided to change the programming language used the web server also needed to change to be able to handle the different code. The best available open software available to handle C# and ASP.net pages was the Internet Information Services.

The IIS software has the ability to provide most of the same components listed above, but is also able to handle C# code instead of Java. Although the IIS server is different from the Apache Tomcat server, it will be implemented in the same way differing only in its configuration files.

4.2.2 Graphical User Interface

The best design for this type of project would be done through the use of C# coding. C#, being a high level programming language, is also one of the best languages for designing websites. Through the use of different classes and methods, the group has decided to design the program in C#. The main class that will be used is going to be the FloorPlan class.

The FloorPlan class will contain all of the elements that are within the home. This class will contain the majority of the methods and will be where the program sends and receives data from the FPGA board. The methods in the Home class are located under Methods in Table 4.2.2a. Each of these methods performs different tasks within each of the classes. Most of them are self explanatory like open Window is a method that opens the window, or lock Door is a method that locks the door. Each method performs a different task. Some of the methods likeStatus() will retrieve the status of the home from the circuit board and let the user know if the door is locked or unlocked, or if the window is closed or open. The window and door status from the circuit board and return a boolean to whatever called the method so that it will know if the window or door were open or closed at that time.
The doors, windows, and temperature are separate classes apart from the house class.

The door class has multiple components that the user may wish to know for each door. There is a class for this component of the home because there are multiple elements that apply for every door in the house. Each door has a dead bolt, a door lock sensor and a door sensor. All of these components should be able to be implemented to any or all doors in the house which is why the program has a separate door class. There is also a windows class for the same reason. Since there are usually multiple windows in a house, the program has to have a windows class so that each window in the house can have the same elements in it. Each window within the house has an open sensor, closed sensor, and a motor. The motor will have an open or close option which will make the motor turn one direction or the other depending on what choice the user inputs. The windows have independent sensors that tell the user what the temperature is outside and inside. The temperature is calculated within the circuit board and then transmitted to the java program. The java program will take the ones and zeros from the binary code that the circuit board sent to it and convert them into a number through the temperature method. From there the double that the method produces is sent to the method that called it and saved. The double will be rounded to the nearest hundredth decimal place so that it does not return a long number.

Table 4.2.2a - GUI Classes, Methods, and Instance Fields

Classes	Methods	Instance Fields	Private/Public
Floor Plan			Private
		Humidity: Double	Private
		Door_Status	Private
		Window_Status	Private
		Lock_Status	Private
		Status_Bytes: Byte Array	Private
	SetStatus		Private
	ReadData		Private
	Send_Data		Private
	PageLoad		Protected
	ImageMap Click		Protected
	Unlock_Door_Button Click		Protected
	Lock_Door_Button Click		Protected
	Open_Window_Button Click		Protected
	Close_Window_Button Click		Protected
Door			Protected
		Closed: Boolean	Protected
		Locked: Boolean	Protected
	Door		Protected
Window			Protected
		Closed: Boolean	Protected
		Open: Boolean	Protected
		Temp_Inside: Double	Protected
		Temp_Outside: Double	Protected
	Window		Protected
Login		Error: Boolean	Protected
		Login_Name: String	Protected
	Login_Button_Click		Protected

another and what is in each one. The first section in each box states the component that the box is for. After that there are multiple elements that define the instance fields for each component of the home. The instance fields are used throughout each class. The last section in the class boxes are the methods. The methods show what functions are used in each class and what they return. Each element in the classes either have a " - " sign or a " + " sign which indicates if the methods or instance fields are private/protected or public. The " # " sign means that they are protected but this sign is not used in this UML diagram. Each instance field contains the type of variable it is after the colon.

When the instance field is an array there is a "[ ] " after the variable type. The methods have the same sort of thing after them, but the type is applied to what the method returns. If the method does not return anything then it is followed by a "void". The arrow from one class to another that has a diamond shape on the end means that one type "has a" relationship to the other. For instance, the class FloorPlan has a Door is considered a "has a" relationship. These classes and relationships can be seen in Figure 4.2.2a.

Figure 4.2.2a - UML Diagram of Classes

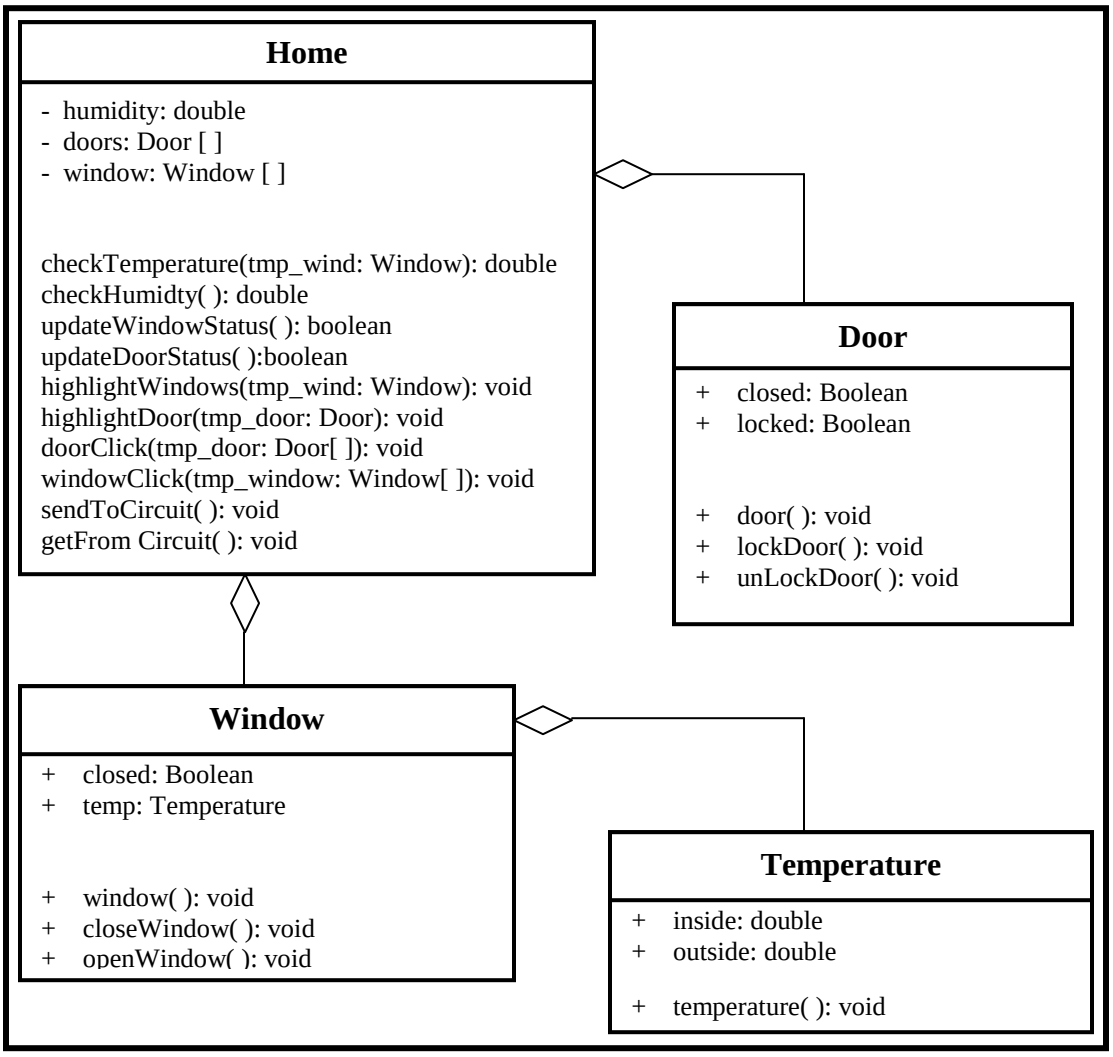

The first page that the user will view is the Home page and the they can access the Login Page. The login page is where the user will input their user name and password into the program. The login page will look similar to the one shown in Figure 4.2.2b and will contain all the elements needed to log onto the webpage. The program will take their user name and apply it to the layout of their house. The only way that the user will be able to view their house layout and control all of the functions within it is by imputing a password. This password will have to contain a specific number of characters, symbols,

and numbers to work properly. The password needs to have these elements to maintain a high security to login to the webpage. After the user types in their name and password they will login to the webpage and view their home floor plans as shown in Figures 4.2.2c and 4.2.2d.

Figure 4.2.2b - Login Page

Within the web layout there can be multiple ways to show the information that the group will present. The group could present the information by listing all of it within a single window. This could get really complicated because if the user is looking at the information, they may not understand which door is which. Just showing the information that is being presented to the user in a text format on the website will not be a user friendly interface. Image map or pop-up windows to represent each section's information would be the ideal way to present the data. This program will contain information for a home monitoring system that shows the status on the windows, doors, temperature and humidity. This is best represented by showing a floor plan of the house that is being monitored and giving the information on that house in a visual way. Figure 4.2.2c shows the floor plan of a house that will be represented with all of the external doors locked and the windows closed. This floor plan also shows the temperature inside the house as well as the average outside temperature along with the humidity. The user can click on all of the outer windows and doors to find out the status of each.

Figure 4.2.2c – House Floor Plan (Everything Closed)

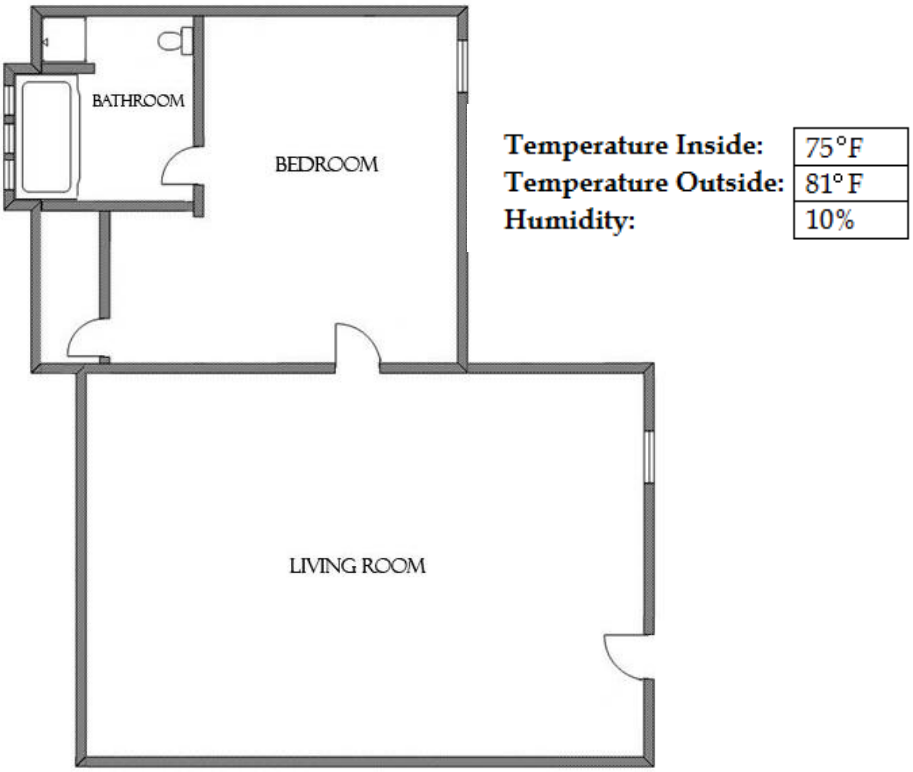

…

The windows and doors in Figure 4.2.2c are all closed and locked, but can be opened or unlocked by just clicking on the window or door and clicking the open button. When a window or door is clicked, information on the object appears in a separate window as shown in Figure 4.2.2d. When the windows are open they will light up red to alert the user. The doors will light up red when they are either open or they are unlocked. When a door is unlocked the user is able to re-lock the door but when the door is open the user will not be able to close it, therefore not able to lock it. When a door is unlocked as shown in Figure 4.2.2d the user has the option to lock the door, but does not have the option to unlock it because it is already unlocked. Since the user will not be able to perform the unlock function at this time the Unlock button is faded within the window. The same set-up also applies to the window as show in Figure 4.2.2d. The window can be closed but because it is already open, the user will not have the option to re-open it.

Figure 4.2.2d – House Floor Plan (After Window and Door Click)

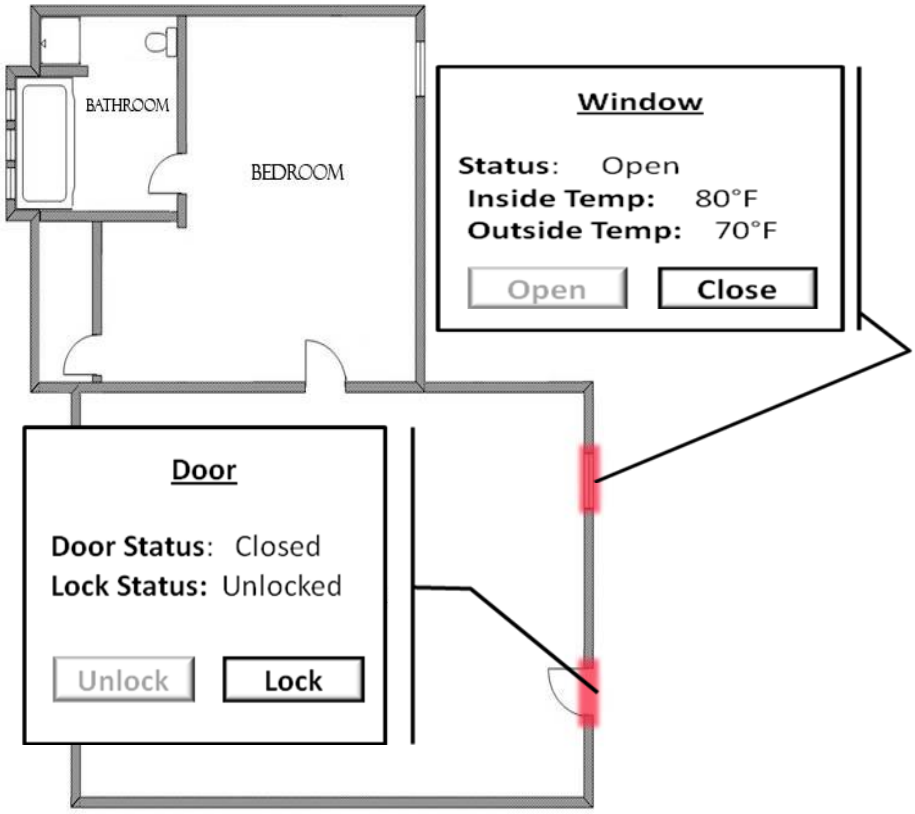

4.3 Hardware and Software Integration

The hardware and software components of the project will be broken down as such. The software for the project will be made up of a website. The website will be developed in the programming language C# and transmitted to the web by ASP.net pages. The website will be kept online continuously by a server. The server will not be included as either software or hardware, but a miscellaneous component. The door and window will also not be considered hardware for the project, but miscellaneous components. Miscellaneous components in this scenario are interpreted as devices which are neither considered hardware nor software, but need to be organized accordingly. So, the server will support the website and act as a medium between the CCA and the website. One of the most important functions the server will take on will be to transmit messages sent by the website to the CCA. The CCA will then take the messages from the server and manage what devices will perform the tasks specified by the website. The hardware for the project should encompass the sensors and the CCA. For integration of the hardware devices into the system one of the factors looked at is what type of signal will the device transmit. So the question which must be answered is whether the device will transmit a signal which is digital or analog. The best method by which to come to this decision of what signal will be transmitted by the hardware devices is by defining the requirements for the CCA first. The requirements for the CCA which must be defined are how many

lines are needed for the device. By knowing how many I/O lines will be needed for the CCA, the requirement for how many A/D converters will be necessary for the project. Many CCA devices have their systems integrated in such a format by which I/O lines have the ability to convert from analog to digital and vice versa built in. This capability makes the decision of defining the specifications for the CCA less difficult. Once specifications for the CCA have been defined, the process of defining the sensors for the project will be much simpler. The functionality and performance requirements for the sensors have already been defined above. The problem which needs to be addressed at this point is to the specifications for the sensors. If the requirements for the two devices (sensors and CCA) do not mesh together, then it will be necessary to reevaluate the requirements for the devices. If the requirements are not evaluated at the early points in the project, then it could cause future problems with the systems integration. This delay to fix requirements may result in backward progression of the project and the eventual reevaluation of the requirements later in the project when there is less time for completion. The point is to fix the requirements early and then acquire the appropriate parts based on the requirements so that the implantation and integration of the physical system is a smooth process. An issue which may have been avoided up until this point when the physical system will begin to be put together will be safety.

As devices begin to be integrated there will be electrical safety issues which must be considered in order to prevent injury and to preserve devices. If a scenario arises where a device is misused it could result in the loss of the device. What would result is incurred cost by the developers to acquire a new device. This situation is unnecessary and would slow the progression of development. So, in order to prevent such a situation it will be necessary to clarify safety for the integration of devices. Safety is important for a project such as this, because you have a team where work is broken up between members.

Since, there is a difference in the level of development experience and the area of experience. It is important as the project progresses in the direction of completion the group communicate where they are on their tasks. A method for keeping track of where the group is in terms of development is using an excel spreadsheet. The spreadsheet would be used as a daily log for the group members to keep track of how much time is being devoted to the project and to what part of the project. This spreadsheet would be sent out on a weekly basis as to illustrate what areas have been given the most focus. Another method to prevent safety issues through communication is setting aside a universal time where the group can meet. If the group is developing the prototype together then communication will be performed in real time. As a result, decisions will be made in real time and there will be fewer issues. The excel spread sheet is more a passive method compared to group development which is more active. Considering the length of the project, the better option at this time would be group development. The reason for this decision is the length of time for the project and the associated cost with creating an excel spread sheet and updating it. This type of implementation is unnecessary for this project, but could be beneficial for a longer term development. For the system integration to be complete there needs to be some form of security.

The security for the system mentioned above is in regard to the website. It is pretty clear in today's time that internet security is critical to the infrastructure of technology. This is considered a safety issue for this project, because if the website is compromised then it can be concluded the system has been comprised. Since, the prototype is supposed to simulate a home; one of the top priorities for the project is to never comprise the security of the home. One way the security of the home can be assured is by never revealing the address of the home. So, if the website has been comprised and a hacker is able to access a user's account, the hacker will not be able to figure out the location of the home. While the website will never reveal the home address it may still possible to find the home by tracking the IP address. There are two potential solutions to this problem. If it is possible, a firewall could be implemented into the system. What the firewall would do is protect the user's computer from being intruded upon by an outsider user. Another solution would be for the website to notify the website users of the situation by phone and email. For the safety of the users of the system, both of these solutions should be implemented to protect the security of the users and their homes otherwise there could be a flaw by just using one or the other.

It needs to be specified that the above recommendations will not be built into the prototype design. This is after consideration for time and necessity for completing the design goals of the project. The above factors are not the only reasons why the above features will not be added to the system. In order to create the above features more research will need to be done in response to system intrusion. Considering the fact the system being developed for this project is a prototype. It will not be necessary to account for such a scenario. However, if more time was available and these features could be added to the design then it could prove beneficial. In order for this system to be truly successful then keeping the system safe from compromise will need to become a new priority. So, if the system were to transition from a prototype into a market product, a more intense look would need to be performed for the flaws in the system.

It is necessary to take a look at how these security features will affect the physical components. A useful feature of the system which was discussed in a previous section was the solenoid for the door component. Not going in to too much detail, but the solenoid for the door is supposed to lock in place, preventing anyone entering the house. The only way for someone to enter the house when the solenoid is in place is with a key. This is assuming there is a malfunction with the website as described on the previous page. The door is the simpler of the two components (door and window) to integrate with security feature. Compared to the door, the window does not have a built in system which locks the window in case of system compromise. Any security addition to the window would require human interaction. This scenario would result in a less beneficial subsystem for the end user to enable. The best solution to the window locking in place is a latch system.

The website will need to be integrated with a CCA using a FPGA. Traditionally, FPGAs are more difficult to program compared to a microcontroller. How this integration will be performed is a relatively simple concept. This will be the functionality of the final design. The website will send a message to the server. This message will be sent after the user

has performed some action. The message which was transmitted to the server will be reconfigured to a sequential binary code. This code will then been sent to the CCA. The code will then be interpreted by the CCA and sent to the respective component. This is part of the reason why the previous discussion about how the data is converted from analog or digital is critical. The sensors will be transmitted a binary code but the format of the code is also important. If these issues are not worked out, the system will not work completely. Part of what will make the integration of the software and the hardware this project is how diligent the components are tested.

If the previous related to integration are dealt with effectively, there still leaves the issue of testing the system. Integration and testing are two parts of the design process, which go hand in hand. In many cases, an issue will never be found unless it has been rigorously tested before hand. The success of the prototype in the long term can be attested to how well it is tested at this stage in the development cycle. Before the testing of the integration of the system can be tested, a set of test cases will need to devised. A test case is a benchmark which quantifies how a system is expected to perform. If the device does not perform correctly, then the team can go back and make modifications and corrections to the design. In the situation where the device successfully meets the requirements for a test case then, the system will progress to the next test case. The test cases for the prototype should be based upon the design requirements. The reason is the requirements are the best set of evidence for what is expected of the system. If the test cases are based off of the requirements then there is an effective method to grade the system's overall capabilities. It is not good practice when creating test cases for a system to focus on the rarest of situations. The scenario which is accounted for in such a test will rarely occur in the field. It will also be difficult to quantify how well the system performs if the probability of a case is rare. The best method is to focus priority on the test cases which are most common based on the design specifications for the system. Then, after the above test cases have been broken down, the time will come where more rare scenarios can be brought up for discussion. Considering the time frame for the development of this project, there is a high probability only the common cases will be tested.

As it stand there is a good chance only the most common of situations will be tested. However, there are methods which can increase the level of efficiency and verify all of the test cases have be verified. The method which comes to mind in this scenario is McCabe's metric. McCabe's metric is an equation solves for the minimum number of paths to make sure all of the nodes in a software program have been completed. This equation is significant, because it provides a quantifiable value to base results off of. Otherwise, there is a greater possibility the software being developed for this project is too complex. The complexity of a software program affects the processing speed of the entire system. McCabe's metric makes sure for this system the amount of test cases developed is just the right amount. This results in faster time to completion for the entire project. McCabe's metric is composed of several parts which make up the amount of test cases necessary for the project.

McCabe's metric is written as such: $V(G)^* = E - N+p+1$. The variables are defined as such E represents the number of edges in the control flow graph. N signifies the number

of nodes resulting from the control flow graph. P is equal to the number of independent programs in the control graph. These resulting values will equate to the McCabe metric for the software program being modeled. The equation itself is simple to understand, but it is useless without the control flow graph it is based off. A control flow is a physical representation of the process by which a software program begins and ends. Before the control graph can be constructed the software program from which the control flow graph will be created must be analyzed. The analysis of the software program can be tedious depending upon the complexity of the program itself. Since the analysis is performed by human beings it is difficult to say how successful the metric will be in the end. However, with a certain level of practice, the analysis resulting in solving the McCabe metric shouldn't be difficult. The analysis of the software program is performed as such. A developer will go through the program line by line. This action is easiest performed when the code has been printed out before hand, because the developer is going to need to box pieces of code. The boxes which result from the analysis of the code are symbolic of the nodes described previously from the control flow graph. By the end of the analysis, a developer should know how many nodes are necessary to complete the McCabe's metric. However, in order to find out the number of edges for the metric equation the control flow graph must be constructed. An edge in the context of the control flow graph is a line coding two nodes. In the process of constructing the graph, nodes are connected by edges based on how the program is designed to flow. By the end of the number of nodes and edges should be available to complete the metric. The last piece of the puzzle is to find out the number of independent programs. Independent programs for the sake of the metric are defined as nodes which are dependent upon any other nodes to continue the progress of completing the program. What this means is any nodes which does not have an edge flowing into it is defined as an independent program, as a result the number of independent programs is counted accordingly. By this point in the process of finding out McCabe's metric all of the necessary variables have been solved for and the minimum of test cases can be solved for. If the final value is greater than or equal to 10 then there was a problem in the calculation of the metric. This means the metric has to be calculated again, because the complexity of the program can be simplified. This means there is a smaller amount of test cases which can cover all of the nodes. This metric can be used to perform a variety of different tests.[40]

One type of test which will be beneficial for the steady progress of this project is regression testing. The basic concept of regression testing is looking backward in order to move forward. Regression testing is utilized in industry as a part of the development process to test software performance. How this format of testing could best be utilized in the scope of this project is to set benchmarks. The initial benchmark will be set after the software programs have been the first time. After the program has run multiple times, the process begins to move toward collecting data which meets the initial benchmark. In order for the program to increase in performance, new benchmarks will need to set. A basic example is a ladder, where the first step of the ladder is the initial benchmark for performance is set. So, with each new benchmark the overall performance of the software improves and does not revert back to its initial state. The process of creating a regression testing platform is best performed by using a configuration management. By using a configuration management tool multiple baselines or steps can be created in the

repository for the software development. This repository would make the data easily retrievable if it were set up on a server. It would be best for the project simplicity that the if server were used to perform configuration management that it was not the same server being used for the project. The server for the project should just be used for the prototype and nothing else to reduce compilation errors. A configuration management server is used for development and should not interfere with the final product. This goes back to the idea in which the final prototype is seamless. The idea of using the same server for multiple components of the project interferes with this end goal. There are some other types of testing which can be useful for this project.

Two other forms of testing which can be used for the development of software in regards to this project is white and black box testing. These two types of testing formats are polar opposites of one another. In regard to white box testing, imagine a white box as the software program being tested. When this white box is being examined the only concern for the developers will be what values or data are going into the box. So, what is being tested is the expected input of the software program being tested. In the case of black box testing it is the exact opposite as specified above. Where in the case of the white box the focus is on the inputs, the black box testing is only concerned about what values or data is coming out of the box. In the scope of developing software both forms are important toward completing the circle of development.

4.4 Market Implementation

In order to test the potential for a product to be successful in the market, it is not uncommon for a company to invest the funds for a survey to be completed. While, a survey should never be taken as the end all be all the information it implies can be used to make an educated guess. What makes performing a survey of the market a good decision is there is little risk for the company and little start cost. If the company believes based on market research that developing of a product would be lucrative then they will go to the step of the development life cycle.

The big difference between this project and a company's project is the level of investment. If a company is going to go through the process of making an actual product this means the company is willing to put capital and the company logo behind it. In the case of this project there is no logo per say, but there is the creditability of the designers work. Part of the process of making a successful product is making sure the product to be created is unique. In most cases when a product is created that is unique the company which it was created under owns the rights to its development. This prevent two potential future problems by having this legal paperwork in place. One, by having the rights to the products creation, the company doesn't have to worry about the developers suddenly leaving the company and selling company secrets. The second reason is in order for any successful company to stay in business it needs to stay completive. A company will never stay completive if the products which it is creation can be made by competitors. In the case of this project, the process is similar. Although, for the scope of this project, the legal research of documentation will not be as in depth as compared to a large corporation. It is necessary to protect the creditability of the group and to verify the

uniqueness of the project. Much of the information in this document is not unique. The information has already been created by individuals not a part of the team for the development of this prototype. As such is the scenario is a requirement to give credit for original ideas where credit is due. Giving credit to original ideas is not just to prevent plagiarism, but because there are other potential ramifications. When an individual uses a resource without permission can lead to proof of copyright information. The topic discussed above about the ownership is a form of copyright. So, in order to prevent copyright infringement for the scope of this project, the group will ask permission to utilize original ideas which are stated as copyrighted. In most cases, the company will give permission to use them as a resource. The only specification the company makes the information cannot be changed or modified and stated as is. Another big difference with companies is the level of expertise.

Companies which stay in business for many years develop a certain level of experience over the time the company is in business. As time goes along the information which the company has created, developed, and maintained is passed down to the longer employees of the company. This level of experience gives the company a huge advantage against less knowledgeable competitors. This is where the two sides really part in terms of scope related to this project. This project for the team is the first real time in life where the theory of engineering becomes an application. As a result, the mistakes which a company would be aware of before it happens will occur in this scenario. This situation effects the production of the project and hinders progression of development.

This project is a prototype which can be made into a marketable product. However, there are some necessary changes which must be made in order to make this prototype into an effective product. One of the first changes which must be made to the prototype is a short time to market. Time to market is a measure of how long it takes for the product to go from being developed to being sold. When a product has a short time to market this maximizes profits for the developers. The reason is because the life cycle for most products is very short. The life cycle of a product follows a bell curve [2]. The curve begins when the product is released declines after the product becomes a mature technology. The developers can help give the product a shorter time to market by using components which are common to industry.

In the design for this prototype, a FPGA will be implemented. If this prototype were to be made into a marketable product, it would be necessary for the implementation to change from using a FPGA to using a microcontroller. An FPGA is designed to be reconfigurable and can fit multiple design scenarios. What makes the use of a microcontroller more lucrative over a FPGA is because it more cost effective to mass produce a product using microcontrollers versus FPGA. The one negative to using microcontrollers compared to FPGA is that the later is cheaper to use comparatively. Another conversion of the system will be for the system to be transformed from being transportable to being an embedded system. The reason the prototype is portable is a practicality of having to present the final design. However, this scenario would not occur for a market product, so therefore the portability of the system is no longer necessary. As a result the development of the system would have to change to accommodate this reality.

As part of the conversion of the system to becoming embedded into home, cost would have to be reevaluated. The reason is because you have new costs associated with the design of the embedded system, which were not considered when the design was portable. One example cost which would need to be evaluated would be the installation of the devices into the home.

These new design specifications would be possible for the creation of a marketable product, because much more effort is put into making the product work. In the case with this system design there is a time period of less than a year. In this year, the prototype will be designed and made into a working prototype. However, in the case of a marketable product, the time period of development is much longer. In most cases, a marketable product will be in development from 1 to 3 year before it is every released to the public. In the process of developing there are several steps which companies go through, which were not a part of this development process.

The first step toward the successful completion of the design of a product is to clarify the specifications. Any product which is going to be developed by company has a set of design specifications created by the company in order to set a benchmark as to the quality of the final product. This step of developed is set up by the level of appeal in the marketplace. There needs to be a need for a product, before any one person let alone a company will go forth with the effort of creating a product. In most cases when a product idea is created it will not be created. There are several reasons for the lack of enthusiasm to invest in ideas. Some of the reasons for a product not being developed include cost, lack of interest, and technology not available. Taking a look at cost, consider for a moment the lack of nuclear power plants in the U.S. One reason for this is the high initial cost of creating a nuclear power plant. A lack of interest situation could be creating a coffee company in a tea drinking company, this may not happen in real life, because investors do not believe the product is profitable. A final reason for products not being developed would be that the technology is not capable of performing the specified way for the product to be successful. Specifications for the product would touch on a wide variety of subjects.

There are three primary types of specifications which a company must consider before the development of a product is undertaken. The requirements of a product include: functional requirements, performance requirements, and safety requirements. The functional requirements focus on what the actions the system will perform. In the case of home monitoring system, the specification made earlier in this form regarding how often the sensors will sample is an example of a functional requirements. These types of specifications are necessary to get rid of any ambiguous information when it comes to how the system will function. Performance requirements are not the same as functional requirements. While, functional requirements focus on how the system will operate. Performance requirements focus on what the system can do at an optimal level. In the case for the design of this prototype there are very few performance requirements in this regard. Most of what would be considered performance requirements can also fit into the category of functional requirements. The key to successfully creating some performance requirements is to be able to separate the difference between the two types of

requirements. The last type of requirement specification is safety requirements. It can be difficult to predict what will be dangerous about a product for the consumer using it. However, the importance of safety in products should not be misconstrued. The reason there is a liability held by a company who development with knowledge that it could be hazardous to consumer's health. So, safety requirements protect the company's image from users incorrectly using the product. All in all these are just a few of the more critical types of requirements and there are some other requirements which a company may specify before a product goes into development. The development of requirement specifications takes time away from production of the product.

It may be seen by some individuals creating requirements is counterproductive toward the development of a product. However, this idea is misleading because effective communication makes a project move smoothly and with ease. Requirement specification fills this need by cutting down on ambiguous information being communicated by the group developing the product. In this regard, if these issues are dealt with at the beginning of a project. They will slow down the future development of the project, because the focus of the project will transform to resolving issues instead of moving the progression of the project. In a worst case scenario, if issues are not dealt with until later in a project. Then, it could result in a backward progression of the project. The backward progression would entail the requirement specifications to be reevaluated to fix any other unforeseen issues with the design of the project. So, it is critical for the specifications of the project to be as clear for the next step in the development process.

The next step in the development process is creation of diagrams for the project which will be created. This step in the development process assumes there is prior experience and knowledge in the area of the project. Part of the reason the requirements writing is to give the developers a base for the creation of any other work for the project. In the case of the prototype for this project, some example diagrams for the software development would be class diagrams and uml diagrams. This process allows the software development and coding to be quick and efficient. Now in the case of hardware development, architectural diagrams and I/O diagrams. The concept with diagrams in software development also applies in this case. The next step in the process will be implementation of the design.

Assuming all the previous step of the development process has been resolved and there is no backward movement for the project. This step should move smoothly and have few issues. The next step in the development process would be testing the implementation of the design. Implementation and testing go hand in hand, because the work is directly related. The most effective manner to successfully implement a design is to as the product is being physically made to test the device for any potential issues. As a result of these actions it cuts down on the overwhelming duty of making sure the final product is ready for the marketplace.

In large companies which design products there is a multitude of people working on different items at a time. In the case of this project this is not the case. Since, the group is small it is to configure devices and integrate them as one. The main reason for this

simplicity is because of the small scale for this project. The small scale of the project allows for there to be comrade and communication. However, the same cannot be said about bigger projects. The larger the project the chances are the more complicated it will be. Another consideration is as the project becomes larger there is a necessity to increase the amount of people working on the project. As a result of the increase in power the effort to manage these individuals can become discombobulated. Industry has countered this scenario with the development of configuration management tools. A big part of the design process for many companies consist of verification and validation. Verification answers the question of whether or not the design meets the specifications it was designed for when the final product has been completed. Validation is not the same thing as verification. Validation attempts to answer the question of whether or not the final product meets the specifications set by the users. In the case of this prototype there will not be users tested this project. It is necessary for the team in regards of this project to take on two roles. Those team roles being both the developers and the users of this prototype. It is difficult to say how well these roles will be utilized throughout the development of this project. These roles are a result of the development steps for this project. For companies it is easier to put a product to market and have the target market use the product. In this situation it is not that simple, because the development of a marketable product is a potential goal it is not for certain.

Configuration management tools are software applications which allow for data to be continuously updated and maintained. In general, there are two locations for saving information when using configuration management tools. These locations are named the repository and the working copy. The repository will act as the backup for the working copy. So, for example you create a document or source code in the working copy. It is a just a simple command to transfer the new data to the repository. This is feature which allows development to continue and not have data lost. In development where deadlines are critical to the completion of a project, this feature will reduce redundancy. This is not the only feature which most configuration management tools have in their arsenal. Configuration management tools allow for data to modified and updated. The tools are not limited to just being able to transfer data. These tools have the ability to modify preexisting data. This option keeps both the repository and the working copy on the same baseline. The ability to stay on the same page when continuously modifying a project will reduce error. This is especially true for software development. In many real world scenarios for software development, it is quite possible to be working for a global company. This means for a project, development of different components may be performed in different time zones. This complicates the work flow and consistency of design. If there are issues with the software it can be difficult to solve issues when there is a large physical distance between development groups. These configuration tools are a necessity to keep the project on track with its completion goals. This is especially true in the case of figuring out the problems which come up with developing a product. The configuration tools now have the ability to find the differences between documents and source code. The ability to find the difference between two forms of data cuts down the man hours for solving errors. As a result of the above features of configuration management tools, there is a greater probability the deadline for the project to be met on time. Now it may appear these tools are more of a necessity then anything for the

workplace in designing and developing products. However, many of these tools are available over the internet for free. Even though this project is not as large as what most Fortune 500 companies undertake. The features of configuration management tools can come in handy. It is also possible to set up system which can be accessed by multiple users.

In the case of a large project it would be beneficial if using configuration management to set up a server for access to the whole group. This would allow for continuous integration of the system without delay. The basic idea would be for the server to retain both the repository and the working copy. What this solution would prevent is the need for one individual to maintain the data locations. Not only would the individual not have to maintain the location, but sending the data to other users is irrelevant. The server will act as a universal port of access for all users. This solution would cut out human interaction and reduce the amount of manpower necessary for the successful management of the project. This scenario for a project such as this where there are so few individuals to begin with. It would be a good practice for this project to implement such a system of configuration management. Even if for this project, the focus is on design and not real world scenarios. To a certain extent for the scope of this project it is simulating the real world. In this respect, development for this project should perform as though this project is a prototype for a real company.

5 Testing

5.1 Hardware Testing

5.1.1 CCA

Several things are required for the functional testing of the CCA. A list can be seen below.
1. JTAG programmer
2. Lattice ISPvm software.
3. USB cable
4. Host Computer
5. Testing Software
6. Multi-meter
7. Temperature probe
8. External Humidity Sensor

Functional Testing: In order to fully test the CCA Power testing section must be completed first. Once power testing is complete, continue with the following procedure.
1. Make sure the DB-9 connector for the solenoid and window drivers is disconnected.
2. Connect the JTAG cable to the JTAG connector on the CCA.
3. Power on the CCA. Program the FPGA and internal flash using Lattice ISPvm.
4. Turn off the CCA. Remove the JTAG programmer.
5. Connect the USB cable to the USB port on the CCA. Connect the USB cable to the host computer.

6. Turn on the CCA. Run the testing software on an external computer.
7. Check the voltage regulators via the ADC FPGA printouts. (I.e. read the registers containing the voltages). Make sure they fall within the tolerances listed in the Testing Requirements Table provided below, Table 5.1.1a.

Table 5.1.1a - ADC Voltage Regulation Verification

Signal	Return	Min Voltage	Max Voltage	Recorded Value
Transformer DB-9 pin1	Transformer DB-9 pin 2	34Vpp	40Vpp	
12VDC #1	Gnd	11.75V	12.25V	
12VDC #2	Gnd	11.5V	12.5V	
3.3VDC #2	Gnd	3V	3.6V	
5VDC	Gnd	4.75V	5.25V	
3.3VDC	Gnd	3.135V	3.465V	

8. Using a temperature probe and a multi meter, probe near the temperature sensor on the CCA. Verify the CCA temperature read by the ADC is within 3°C of the temperature measured with the probe. This temperature should be no more than 60°C. If it is, discontinue testing. Power off the CCA.

It must be verified that the CCA can read the sensors correctly. To do this, follow the procedure given.
1. Connect the solenoid/window drive DB-9 to the CCA. Power on the CCA.
2. Running the software verify the inside and outside temperatures. Using the temperature probe and the multi-meter measure the temperature outside near the temp sensor. Verify it is within 3°F of the reading in the software.
3. Using the temperature probe measure the temperature inside near the temp sensor. Verify it is within 3°F of the reading in the software.
4. Using the external humidity sensor measure the humidity near the system's humidity sensor. Verify they are within 3% of each other.
5. Using a humidifier or a spray bottle, increase the humidity near the outside moisture sensor. Verify the humidity reading in the software increases with the amount of moisture released in the air. All results may be recorded in the table below, Table 5.1.1b.

Table 5.1.1b - ADC Voltage Regulation Verification

Source	Recorded Value	Reference	Recorded value
Inside Temperature		Meter Temperature	
Outside Temperature		Meter Temperature	
Humidity sensor		External Humidity sensor	
Humidity sensor		Humidity increase	

5.1.2 Power

Testing the PDU will require several things: An oscilloscope with at least 3 voltage probes; a current probe or shunt; a multi-meter; and a variable resistor load. A list can be seen below for convenience.

1. Oscilloscope
2. 3 voltage probes
3. Current probe or Shunt
4. Multi-meter
5. Variable resistor load.
6. Temperature Probe

Before the initial power-up (the first time the CCA will be powered on), power and ground signals need to be checked for shorts. To do this, the following steps must be taken.

1. Use an ohm meter and (with the transformer disconnected from the 120Vac wall power) measure the resistance between the positive and negative leads of the plug.
2. Then measure the resistance between the positive and neutral leads. The resistance of both needs to be at least 100Ω.
3. On the DB-9 attached to the transformer measure the resistance between the positive and negative signals (pin 1 vs. pin 2). The resistance should be at least 100Ω.
4. Measure the same signal on the CCA. (I.e. pin 1 vs. pin 2 on the power DB-9). If the resistance of any of these is not at least 100Ω do not power the CCA on.
5. Now the voltage regulators on the CCA must be checked. Measure the resistance between 12VDC #1 and ground, 12VDC #2 and ground, 5VDC and ground, and 3.3V and ground, and 3.3VDC #2 and ground. All resistances need to be at least 100Ω.
6. Measure the resistance between 1.2V and ground. It needs to be at least 10Ω. This lower resistance is specific to the 1.2V signal and the voltage regulator creating it. The Table below is provided for convenience, Table 5.1.2a.

Table 5.1.2a - Power to Ground Resistance Verification

Signal	Return	Min Resistance	Recorded Value
Pos lead (to wall)	Neg lead (to wall)	100Ω	
Pos lead (to wall)	Neutral lead (to wall)	100Ω	
Neg lead (to wall)	Neutral lead (to wall)	100Ω	
Transformer DB-9 pin1	Transformer DB-9 pin 2	100Ω	
Power DB-9 pin 1	Power DB-9 pin 2	100Ω	
12VDC #1	Gnd	100Ω	
12VDC #2	Gnd	100Ω	
5VDC	Gnd	100Ω	
3.3VDC	Gnd	100Ω	
1.2VDC	Gnd	10Ω	

The resistances between each of the power signals must be verified. To do this, proceed with the following steps.

1. Measure the resistance between 12VDC #1 and 12VDC #2.
2. Measure between 12VDC #1 and 5VDC.
3. Measure 12VDC #1 with respect to 3.3VDC and 1.2VDC respectively. The resistance between any of the power signals needs to be at least 100Ω.
4. Continue by measuring the resistance of 12VDC #2 with respect to 5VDC, then 3.3VDC and 1.2VDC respectively.
5. Continue in this fashion measuring 5VDC with respect to 3.3VDC and 1.2V respectively.
6. Lastly measure the resistance between 3.3V and 1.2V. All resistances should be greater than 100Ω. The table below has the tests, requirements, and locations for observed values, Table 5.1.2b. If any of the previous tests fail, do not power on the CCA. Discontinue testing.

Table 5.1.2b - Power to Power Resistance Verification

Signal	Return	Min Resistance	Recorded Value
12VDC #1	12VDC #2	100Ω	
12VDC #1	3.3VDC #2	100Ω	
12VDC #1	3.3VDC	100Ω	
12VDC #1	1.2VDC	100Ω	
12VDC #2	5VDC	100Ω	
12VDC #2	3.3VDC	100Ω	
12VDC #2	1.2VDC	100Ω	
5VDC	3.3VDC	100Ω	
5VDC	1.2VDC	100Ω	
3.3VDC	1.2VDC	100Ω	

If all previous tests pass, it is safe to make the initial power on verifications. To do this, proceed with the following steps.

1. Make sure the DB-9 between the transformer and the CCA is disconnected.
2. Wire the transformer into the wall power. Be sure to check polarity.
3. Make sure the power switch on the CCA is in the off position. Then connect the DB-9 from the transformer to the CCA.
4. Using the oscilloscope and voltage probes measure the voltage on the input to either of the 12V voltage regulators. A fully rectified and filtered waveform should be seen. It should be approximately 25.2V. If it is not discontinue testing.
5. Using the oscilloscope, probe between 12VDC #1 and ground. Turn the power switch on for one second then off again. During that time you should have seen 12V DC on the oscilloscope. Verify the voltage falls within the tolerances listed in the Test Requirements Table at the end of this section. If not discontinue testing.
6. Probe between 5VDC and ground. Turn the power on for one second and then off again. During that time you should have seen 5V DC on the volt meter. Verify the voltage falls within the tolerances listed in the Test Requirements Table at the end of this section. If not discontinue testing.
7. Probe between 3.3VDC and ground. Turn the power on for one second and then off again. During that time you should have seen 3.3V DC on the volt meter. Verify the voltage falls within the tolerances listed in the Test Requirements Table at the end of this section. If not discontinue testing.
8. Probe between 1.2VDC and ground. Turn the power on for one second and then off again. During that time you should have seen 1.2V DC on the volt meter. Verify the voltage falls within the tolerances listed in the Test Requirements Table at the end of this section. If not discontinue testing.
9. Probe between 12VDC #2 and ground. Turn the power on. Manually ground the On/Off pin on the 12VDC #2 voltage regulator for one second. During that time you should have seen 12VDC on the volt meter. Verify the voltage falls within the tolerances listed in the Test Requirements Table at the end of this section. If not discontinue testing.

A table of signals and requirements can be seen below, Table 5.1.2c. If all tests pass then move on to the functional testing of the CCA. If not discontinue testing.

Table 5.1.2c - Initial Power On Voltage Regulation Verification

Signal	Return	Min Voltage	Max Voltage	Recorded Value
Transformer DB-9 pin1	Transformer DB-9 pin 2	24Vpp	26.5Vpp	
12VDC #1	Gnd	11.75V	12.25V	
12VDC #2	Gnd	11.5V	12.5V	
5VDC	Gnd	4.75V	5.25V	
3.3VDC	Gnd	3.135V	3.465V	
1.2VDC	Gnd	1.14V	1.26V	

5.1.3 Door

To test the door several things will be needed. A list can be found below.
1. Oscilloscope
2. 1Ω load.
3. DB-15 pins male and female.
4. Current Probe
5. Voltage Probe
6. USB cable
7. Controlling computer

In order for the door to be fully tested both the power testing section and the CCA testing section must be completed first. If both have not been completed successfully, do not continue testing. The procedure for testing the door can be seen below.

1. Place a 1Ω load between the drive lock signal at the DB-9 and ground.
2. Power on the CCA.
3. Using the oscilloscope, probe across the load.
4. Place the current probe around the wire attached to the load. Make sure the correct polarities are in place.
5. Connect the USB cable to the CCA and to the controlling computer.
6. Run the test program or the software user interface.
7. Using the appropriate software click the “Lock Door” button.
8. Verify there is a 12V ± 0.5V 500ms ± 0.5ms 2.4A ± 0.5A pulse.
9. Verify the rise/fall time is no greater than 1us.
10. Move the 1Ω load to be between the drive unlock signal and ground.
11. Place the oscilloscope voltage probe across the load.

12. Place the current probe around the wire attached to the load. Make sure the correct polarities are in place.
13. Click the “Unlock Door” button on the software.
14. Verify there is a 12V ± 0.5V 25ms ± 0.5ms 2.4A ± 0.5A pulse.
15. Verify the rise/fall time is no greater than 1us. Power off the CCA. Record the results in the Door Test Requirements Table provided below, Table 5.1.3a.

Table 5.1.3a - Door Test Requirements

Signal	Return	Min	Max	Recorded Value
Lock Door Voltage	Gnd	11.5V	12.5V	
Lock Door Pulse Width	Gnd	24.5ms	25.5ms	
Lock Door Current	Gnd	1.9A	2.9A	
Lock Door Rise time	Gnd		1us	
Lock Door Fall time	Gnd		1us	
Unlock Door Voltage	Gnd	11.5V	12.5V	
Unlock Door Pulse Width	Gnd	24.5ms	25.5ms	
Unlock Door Current	Gnd	1.9A	2.9A	
Unlock Door Rise time	Gnd		1us	
Unlock Door Fall time	Gnd		1us	

Now that the driving and receiving circuitry has been confirmed, hook up the DB-9 that allows the signals to go to and from the door. The next test will confirm that the solenoid actually drives the deadbolt.

1. Make sure the DB-9 is connected.
2. Connect the USB cable to the CCA and the controlling computer.
3. Power on the CCA.
4. Place the oscilloscope current probe around the wire going to drive_lock pin of the DB-9. Make sure the correct polarities are in place.
5. Run the test program or the software user interface.
6. Make sure the door is closed.
7. Using the appropriate software click the “Lock Door” button.
8. Verify there is a 25ms ± 0.5ms 2.4A ± 0.5A pulse.
9. Verify the deadbolt is in the locked position.
10. Verify the user software interface shows the door is locked. Results may be recorded in the verification table provided below, Table 5.1.3b.
11. Move the current probe to the wire going to the drive_unlock pin of the DB-15. Make sure the correct polarities are in place.
12. Using the appropriate software click the “Unlock Door” button.
13. Verify there is a 25ms ± 0.5ms 2.4A ± 0.5A pulse.
14. Verify the deadbolt is in the locked position.
15. Verify the user software interface shows the door is unlocked. Results may be recorded in the verification table provided below.
16. Lock the deadbolt by hand.
17. Verify the software user interface shows the door is locked.
18. Unlock the deadbolt by hand.
19. Verify the software user interface shows the door is unlocked.
20. Open the door.
21. Verify the software user interface shows that the door is open.
22. With the door open, unlock the deadbolt by hand.
23. Click the “Lock Door” button on the software user interface.
24. Verify the deadbolt does NOT lock. Neither solenoid should have moved.
25. Verify the software user interface displays an error message telling the user that the door is open and cannot be locked until it is closed.
26. With the door open, lock the deadbolt by hand.
27. Click the “Unlock Door” button on the software user interface.
28. Verify the deadbolt does NOT unlock. Neither solenoid should have moved.
29. Verify the software user interface displays an error message telling the user that the door is open and cannot be unlocked until it is closed.

Table 5.1.3b - Door Test Requirements for Solenoid

Signal	Requirement	Result
Door Lock current	2.4A ± 0.5A	
Door Lock Pulse width	25ms ± 0.5ms	
Deadbolt Position	Locked	
Virtual Deadbolt	Locked	
Door Unlock current	2.4A ± 0.5A	
Door Unlock Pulse width	25ms ± 0.5ms	
Deadbolt Position	Unlocked	
Virtual Deadbolt	Unlocked	

5.1.4 Window

To test the window several things will be needed. A list can be found below.
1. Oscilloscope
2. 10Ω load.
3. DB-15 pins male and female.
4. Current Probe
5. Voltage Probe
6. USB cable
7. Controlling Computer

In order for the window to be fully tested both the power testing section and the CCA testing section must be completed first. If both have not been completed successfully, do not continue testing. The procedure for testing the window can be seen below.

1. With the DB-9 disconnected from the sensors, place a 10Ω load between the window drive up pin and the ground pin on the DB-9.
2. Power on the CCA.
3. Place the voltage probe across the load.
4. Place the current probe around the wire going to the load. Make sure the polarities on the current probe are correct.
5. Click the “Open Window” button in the user interface software.
6. Verify that 12V ± 0.5V; 15s ± 0.5s; 0.5 ± .05A is seen on the oscilloscope.
7. Move the load to be between the drive window down pin and ground on the DB-9.

8. Place the voltage probe across the load and the current probe around the wire going to the load. Make sure the polarities on the current probe are correct.
9. Click the “Close Window” button in the software.
10. Verify that 12V ± 0.5V; 15s ± 0.5s; 0.5 ± .05A is seen on the oscilloscope. Record the results in the Window Test Requirements Table. Power off the CCA.
11. Connect the DB-9 to the CCA and Power on the CCA.
12. Make sure the USB cable is connected to the CCA and to the controlling computer.
13. Place the oscilloscope current probe around the wire going to window_open pin of the DB-9 Make sure the correct polarities are in place.
14. Run the test program or the software user interface.
15. Make sure the widow is closed.
16. Using the appropriate software click the “Open Window” button.
17. Verify there is a current draw of 0.5A ± 0.05A until the window is fully open.
18. The current draw should stop when the widow reaches the fully open position or when 15 seconds from the time button is clicked is reached
19. Verify the user software interface shows the window is open. Results may be recorded in the verification table provided below.
20. Move the current probe to the wire going to the window_close pin of the DB-9. Make sure the correct polarities are in place.
21. Using the appropriate software click the “Close Window” button.
22. Verify there is a current draw of 0.5A ± 0.05A until the window is fully closed.
23. Verify the user software interface shows the window is closed. Results may be recorded in the verification table provided below.

Table 5.1.4a - Window Test Requirements

Signal	Min	Max	Recorded Value without window	Recorded Value with window
Window Open Voltage	11.5V	12.5V		
Window Open Current	0.45A	0.55A		
Window Open Pulse width	14.5s	15.5s		
Window Close Voltage	11.5V	12.5V		
Window Close Current	0.45A	0.55A		
Window Close Pulse Width	14.5s	15.5s		

5.1.5 Sensors

After all implementation is done and the final integration of all of the system's components is completed the last step in the process is for product testing. Testing is a very important process in the development of a product, because it is a check on the outcome of the product compared to the desired outcome. The testing of the system's sensors will play a very large part in the outcome of the overall system. The system's sensors are a major player in the system as a whole, because data that they provide is used and manipulated by the system to make decisions. So it is very important that the sensors are working correctly and accurately to the expectations, requirements, and specifications.

As it has been researched and designed and discussed early, the system will consist of three different types of sensors. These sensors include: a temperature sensor, a humidity sensor, and a window sensor. Each sensor will have its own testing steps and procedures and will be discussed separately in detail below.

Temperature:
In this system there will be two different temperature sensors; one located inside the home and the other temperature sensor located outside of the home. By using these two temperature sensors, the system will be able to determine the temperature differential between the home and the environment, and then from that data the system will be able to make decisions on how to change the status of the window. The different cases for the window to open or close have been explained earlier in this documentation.

To begin with, the temperature sensors will go through a general testing phase to ensure proper functionality. It will be made sure that the sensors are receiving the correct power by using a voltmeter and an ammeter. And then they will be tested with the system to make sure that they are transmitting and receiving correctly. The temperature sensors will be connected to the printed circuit board which will then communicate with the FPGA. The FPGA will be used to send commands to the temperature sensors and then ensure that a correct response is received back to the FPGA, depending on the type of command sent.

Once the functioning of the temperature sensors has been established, and it is ensured that they are communicating with the system correctly, the next step will be to test the accuracy of the temperature sensors. The temperature sensors will be tested for accuracy for both a high extreme and a low extreme, with an acceptable accuracy of plus or minus two degrees Celsius. In order to be able to determine the accuracy of the temperature sensors, another temperature sensor will be used. There will be both a digital temperature sensor and a mechanical temperature sensor, cooking thermometer, used to calculate the accuracy of the system's temperature sensors. To test the low extreme temperature range, regular ice will be used. The temperature sensors will be placed very close to regular ice, and will be left to sit for approximately five minutes to allow for the temperature sensors to adjust to a level temperature reading. Along with the system's temperature sensors, the other two external temperature sensors will also be exposed to the same ice for five minutes. Once the ten minutes is up, the system will then send the command to the temperature sensors for their temperature reading, and the temperature reading from the two external temperature sensors will be recorded.

Similarly, to test the high extreme temperature range, a standard hair dryer will be used. The temperature sensors and the external temperature sensors will be exposed to the hair dryer for five minutes, all at the same distance away from the hair dryer. Again, the system will request the reading from the temperature sensors and the external temperature sensors, recording all values. For both the high and low extremes, both of the external temperature sensor's readings will be averaged together to achieve an average standard to compare to. Then the reading from the system's temperature sensors will be compared to the averaged temperature reading, for both the high and low temperature ranges. In order for success to be determined, the difference between the two readings shall not be more than two degrees Celsius. If the difference is greater than two degrees, measures will be taken to try improving the accuracy and then the temperature sensors will be retested. These steps will be repeated until the desired accuracy of plus or minus two degrees Celsius is achieved.

Humidity Sensor:

The importance of testing the accuracy of the humidity sensor is because of the system's capability of opening the window automatically without user input. If the user sets the system to automatic and it decides to open the window, then the humidity sensor is present to prevent the window from being open when it is raining outside. Therefore, the accuracy of the humidity sensor is important, because the sensor will have to be sensitive enough to make sure that the slightest of rain is detected and the system is notified. As explained in the research of the humidity sensor, it is very difficult to say when it is actually raining based on the humidity level. Theoretically when it is ranging the humidity level should be 100 % RH, but this is not always the case so a lower threshold will be set by the system. To aid in determining the accuracy of the humidity sensor and external humidity sensor will be used to provide another reading.

In order to simulate rain, there will be two approaches taken. The first will be to use a spray bottle to emit a mist of water in the air around the humidity sensor, and the second method will be to place the humidity sensor inside of a bathroom with a hot shower running. At approximately one minute intervals, for five minutes for each approach above, the humidity readings will be taken for both the system's humidity sensor and the external humidity sensor. At each time interval, for each approach, the two humidity readings will be averaged together. Then the reading for the system's humidity senor will be compared to the average humidity reading. Now because it is much harder to determine the humidity reading when it is actually raining, there will be a little more leniency with the accuracy of the humidity sensor. The difference between the humidity sensor's reading and the average reading shall not exceed more than 10 %RH. Also, the group will monitor the experiment to make a logical conclusion as to when there is enough water in the air to consider it raining and then measure the humidity reading and see if the difference is acceptable. These procedures will be repeated until the desired accuracy is achieved.

Window Sensor:

The purpose of the window sensor is important because it will inform the system of the current status of the window; opened or closed. Testing the accuracy of the window sensor is significant because we will want to ensure that the correct status is transferred to the system. The testing of the window sensor will be pretty straight forward. The sensor will be mounted to the window and frame as described above in the design of the window sensor. Then the window will be opened and closed, while looking at the reading on the system, from the window sensor. The point at which the sensor changes state will be recorded and measured. This distance will be compared against the product's specification of 0.315 inches operating distance. If this distance is not reached then the sensor will be modified and the test procedure repeated until the desired operating distance is achieved.

5.2 Software Testing

5.2.1 Graphical User Interface

Visual Studio is the design application that the group will be implementing all of its code on and applying it to the internet. Visual Studios is a program in which the user will be viewing all of the data that is stored within the system and pertains solely to their home. There are a few different things that need to be tested within this program to make sure that the functionality and the precision of it works properly.

The program needs to be tested on its own before it is tested with the circuit board and other elements. After writing the code, the programmer needs to test it with a source file. The text file can have a few pieces of information that the program can read and perform some task. The text can have each line of information apply to a different component. This will allow the programmer to type open (or binary numbers) into the first line and then that line will correspond with the status of the window. If the program reads in the information, converts it into a task, and the window appears open in the layout by lighting up red and the status says open; then the program read the information properly for this component and performed the correct tasks. This needs to be tested on each component of the program. After checking if the information that is transferred to the program can be properly assigned to a specific task, the programmer needs to check if the program can send the correct information back to the text (or circuit board when implemented). To do this the programmer must have a method that will send information whenever the user wants to perform a task. In this case the best way to test it is to click a button and have it send either a binary number or a word to the text file that will change the status of the object that was changed. For instance, if the programmer goes into the webpage and clicks on a door that is shown as unlocked, and then he clicks the lock button to lock the front door. The program should send information to the text file so that when the text file is open it says that the door is now locked. This should work for every aspect of the home and should be tested for each one individually so that when the program is performed with the circuit board, it is more reliable.

For each aspect of the coding process there is a chance that some portions of the code could be incorrect. If the code contains a simple error within it, the program should be able to catch that error and tell the programmer exactly where it is. This is very helpful especially when writing large amounts of code but usually only works for simple mistakes. When dealing with more complex errors within the code it can be much harder to track down where those errors are occurring. This is why the use of the debugger is essential when trying to find the errors that may be within the program. The debugger will allow the programmer to go through each portion of their code step by step. It allows the programmer to use break-points that are applied to specified portions of the code. This will let the programmer jump to those break-points without having to go through each line of code individually. In every testing process for computer programs, the programmer will run into problems and will have to solve them through this process. Debugging the code is essential when trying to make sure that the program works properly.

First the program needs to be tested for functionality. The program needs to be able to send data to the circuit board properly. If this is achieved then the circuit board should be able to convert the information into a task that will be applied to different components within the house. The first step in the testing process is trying to send data from the program to the circuit board. The program needs to be applied to the circuit board through the use of the serve and should have a function that sends the data. The programmer will have to test each component of the program step by step. The programmer should check and see if the code can send any combination of ones and zeros to the Verilog code within the circuit board to make it perform a specific function. If the circuit board can receive a signal from the program then it should be tested with different signals which will make the circuit board perform tasks that can be checked on LED lights on the board. The first tasks should be basic on and off codes that can be performed on the LED lights alone. Once the data can properly show that it sends to the board in the proper order through the use of the LED lights then it is time to implement the code to the functions of the house.

The group should try and send a series of numbers within the C# code to the circuit board to test the functionality of the doors and windows. The code for the window should be able to tell the circuit board to send power to the correct wire which is attached to the window motor. The code needs to be able to choose the right wire because if it does not then the window will turn in the wrong direction which will cause problems. When the window has the proper amount of power to the correct wire it should raise the window to the open position. The series of binary numbers that is sent to the circuit should also tell the board how long the power needs to be applied to the window motor so that it raises to a pre-determined height. This is vital to the functionality of the board because if the window rises too high then it may break or cause problems with the motor. The window will also have sensors at the top and bottom of it so that when it raises and lowers, the system will know and be able to stop. The sensors will tell the circuit board if the window is open or closed. This information needs to be able to get back to the program so that the user can view the data accurately. The program needs to be able to retrieve information from the circuit board, so to test this the programmer will make the circuit board perform a task and try to send the information about that task back to the program and convert it into an understandable language or function; such as making a window light up red (alerting the user that it is open). Once the program can retrieve information from the circuit board the group needs to test each component of the window by running it through the whole series of functions. The window needs to be programmed to open and the circuit board should perform this task and update the information on the window status within the program. The window should show up in the program as open because it retrieved information that showed the sensor being connected at the top of the window. The same task should be performed for closing the window.

The doors of the house should be tested in a similar manner as the windows but with different components. The door should be tested on the locked and unlocked portions, as well as the open and closed portions. The program needs to be able to send a binary code to the circuit board that tells it to send power to the solenoids within the door to lock and

unlock it. This should be tested for each solenoid. The power that is applied to the solenoid within the door should have a different binary signal that is passed from the program into the circuit board. The program needs to make sure that the signal corresponds with the proper component. The group should tell the program to send a signal to the board and apply power to the solenoid that will lock the door by pushing the solenoid into the back of the deadbolt. There should also be a sensor on the deadbolt to detect if it is locked or unlocked. This sensor should send information to the circuit board and back to the program so that it can show the user that the door is now locked. Once the door is locked the group should be able to see the information on the webpage that says that the door is locked. The lock button should be grayed out so that they can't click it again and then they should test the unlocking solenoid. By clicking the unlock button, the program should send the code to the circuit board. Once the circuit board receives the code it will perform the same task that it did for the other solenoid. If the door unlocks then the program sent the right information. After unlocked the status on the website should show the door is unlocked by light up the door red in the layout and stating it in the window. If the output is correct then it received the signal from the sensor inside the door correctly and applied the information to the proper component viewed on the webpage.

The program is going to be checking the temperature inside and outside the house as well. This means that it is going to be using the information sent by the circuit board to create a numeric value and not just a Boolean. The program will be taking in a binary number and will have to convert it into a decimal number while assigning it to the proper sensor. The program is not going to be sending information on the sensor back to the circuit board because it will not change after going into the program. The purpose of retrieving this information is solely to display it to the user so that they can better understand why the window may be in the open position. The best way to test this is to create a code that will convert a binary number into a decimal number and display that number within the outside/inside temperature display area. The temperatures should be converted to degrees Fahrenheit. If the sensors are sending the correct information to the circuit board and it is sending the information properly to the program, then it should display on the screen properly. This can be checked by having a separate temperature gage next to where the temperature is being read and then compare the two results. If the temperature gage reads about the same temperature as the program reads, then it converted the information into the proper format. This should be tested with different temperatures to show consistency.

Once the temperatures are properly tested within the program, the implementation of the humidity sensor into the program should be tested. The humidity sensor should give the proper amount of moisture within the air to the circuit board. This should show whether it is raining or not. If it is starting to rain, the windows should be closed so that the rain does not get inside the house. If the sensor does not tell the program whether or not it is raining, then the user may not understand why the windows are closed. This could become a problem because the user will have the ability to open the window, and do so because they may not know that it is raining. The humidity can to be imputed into the program as a Boolean so that it is easier for the user to understand. It can be display as

either raining or not raining so that the user can understand why they may not want to open the window. As long as the circuit board is properly tested and sends the correct information to the program, it should display accurately. This can be tested by simply spraying some water on the sensor and checking how the program displays the information that it is given. If it takes too long or displays the wrong information then the input method and conversion should be changed and re-tested.

After all testing for each component of the house is done the only thing to check is to see if an array of the same component would work. This should already have been tested for the temperature sensors because there are going to be at least two of those, but it should also be tested for the windows and doors. This can be tested by making a text file like done in the beginning, and inputting different information for the same type of component. This means that the programmer should test multiple doors buy trying to set one door to unlock and another to lock. The layout should properly show each door in the correct condition. The multiple components need to correspond correctly on both the text file and visual layout that the user will view. Once tested for the door it should be tested on every other component of the house through the text file. The programmer should create a single house with multiple doors, windows and sensors within the program and have a text file that contains the data for that house. After testing this portion of the code, the program should have all the testing complete and work properly for any situation in which it could encounter.

5.2.2 Server

As with all of the components of the home monitoring system, the server is a very important aspect to the overall project. The server is responsible for hosting the web pages, in order for the home's user to monitor and change the status of his home monitoring system. Because of the server's importance to the overall project, the testing of the server is also very important. Testing of the server will involve two different aspects: first the server will be tested to ensure that it communicates correctly with the FPGA and PCB and second the functionality of the web server's configuration will be tested to ensure it is operating properly..

The first and most important testing steps will be to ensure that the server and the FPGA board are able to communicate between themselves. Without communication between the two, the server will not be able to function and give the home's user the accessibility to monitor his home over the internet. To test this channel of communication, the server will be connected to the FPGA board through a USB connection. The server will have code written to communicate with the FPGA board, in order to request and receive information. Then the server will execute each command separately and ensure that the result matches the expected result of the code. Examples of these commands include: requesting the temperature reading, requesting the humidity reading, and requesting the status of the window state. Once all commands have been executed and it has been determined that the communication between the FPGA board and server is working correctly, then this testing will be complete. If any results do not match the expected

result, then changes will be made and these test steps will be repeated until the two components work correctly.

The second portion of testing will be in regards to the functionality of the web server's configuration. This testing will include: user authentication, dynamic content, and the security aspects of the web server. To test this functionality, a second computer will be used that is connected to the same network, which will act as a client machine to the server. To begin, the client compute will enter the address of the web server and attempt to connect with it; this is where the security aspect of the web server is tested. When a client computer attempts to connect with the web server, it will require that the connection between them is correct and secure. To do this the SSL is implemented by the server. SSL involves the encryption and decryption of data between the client and the server. Data from the server is encrypted and sent to the client, where it is decrypted, and then vice versa. To ensure a secure connection, the client and server have a public and private key, where if data is sent by the server using the client's public key, then only that client with it's personal private key can decrypt the data. To test this, when the client attempts to connect to the server it is required to accept a security certificate, which contains the key for the server. Once this is accepted then the client can communicate successfully and securely with the server. If the certificate does not appear, or is accepted and the webpage is not displayed, then the server will have to be reconfigured, and the test steps repeated to test this functionality.

Once the client has accepted the certificate and has made a connection with the web server, the web server displays a user login. For testing purposes, a variety of different usernames and passwords will be used to test the user authentication of the web server. It will then be checked that only the usernames and corresponding passwords, that are stored in the web server's configuration files, allowed access into the website. If any usernames or passwords that were not located in the server's file allowed access, then the system will be debugged and fixed, and then again it will be re-tested to ensure correct functionality. Finally, the dynamic content function of the web server will be tested. Once the client has successfully connected to the web server and logged in, then the web server will display the Java Servlets and Java Server Pages. The client will be monitored and when the system updates its information from its sensors and such, the client will be checked to make sure that it also received the updated information. This test will ensure that the web server is updating the information dynamically on the web pages. Again these steps will be repeated until the desired results are achieved.

6 Overview

6.1 Schedule

6.1.1 Overview

The schedule for this project is broken down into several parts of a timeline. The components of the timeline will be based on the major parts of the table of contents for the documentation. At the beginning of the project timeline, the group focused on

defining the project. Defining this project was broken down into finding a problem and developing a project around it. Once the group had agreed upon a problem to focus the project, the focus changed to taking the problem and developing possible solutions. Over several weeks, the team came together and created a solution for the problem the team is solving.

The group then put their efforts toward compiling a multitude of researched information pertaining to the project. In the previous step, when the group was creating a solution a sub step was to create a set of specification and requirements. Now, taking all those specifications and requirements for the project, the group had to match the technical information with the information previously written. In the process of performing the research for the project, issues came up and needed to be resolved. Ideas which the group had initially accepted as the route to take in the project were countered by real information.

Leading into the next step, the group designed and implemented the final solution to the problem. Every other step leads into these steps, in order to make an effective design and then implement the design. The research will be used as a backbone to fall back upon when issues related to design occur. The design needs to be complete before the group can even make the decision to implement it. Design and implementation are not the same functions in a project. Design is related to theory and based on previous experience and education. However, implementation goes a step further than design, because the group will take the design and apply it to real world equipment and items. This goes into the final step of the timeline. Once the project had been implemented, the group concentrated on testing the project. While, this step of the process is last, it should not be misunderstood as not being critical. Testing is critical toward the completion as it fine tunes any previous mistakes which were not seen until this point in the project.

6.1.2 Milestones

In order to achieve success in the designing, implementing, and completion of this project, there will be milestones setup with specific time frames for certain tasks. The organization and planning for each task, and its projected timeframe, will result in a smooth project and effective prototype. The group has decided on several high level tasks, that will incorporate several low level tasks, that will need to completed to ensure the success of the project. These high level tasks include: the Senior Design 1 Initial Documentation, the involved research, the design of the system, the plan for parts acquisition, the building of the final prototype, the window implementation, the graphical user interface implementation, the web server implementation, the FPGA and PCB implementation, the overall system integration, the first round of testing, the first round of bug fixing, a second round of testing, and a final phase of bug fixing. Each task will be discussed in further detail below.

Senior Design 1 Initial Project Documentation:
This task is the overall view of the compilation of the project's goals and objectives, specifications and requirements, research, and design of the project. This task was assigned on March 22nd and the final documentation is due on the 3rd of May, and consists of a 120 page document covering all aspects of the project. See Figure 6.1.2a below for information.

Research:
The high level task of research for this project includes the initial project research and also the continued research throughout the Initial Project Documentation phase, specific to the different aspects of the system. The research for this project began when the task of the documentation was initially assigned and continued throughout most of the documentation until the 26th of April. See Figure 6.1.2a below for information.

Design:
The design of this project is a major part of the Initial Project Documentation. The overall task of the project design includes the design of all of the different system components, including: the FPGA and PCB, power, sensors, web server, and graphical user interface. This task will start shortly after the initial project research and continue on until the completion of the Initial Project Documentation, occurring from March 29th to May 26th. See Figure 6.1.2a below for information.

Figure 6.1.2a - Project Milestones #1

	Task Name	Duration	Start	Finish
1	EEL 4914 - Paper	31 days	Mon 3/22/10	Mon 5/3/10
2	Research	26 days	Mon 3/22/10	Mon 4/26/10
3	Design	21 days	Mon 3/29/10	Mon 4/26/10

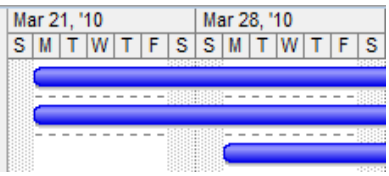

Parts Acquisition:
The important task of parts acquisition consists of the purchasing and acquirement of all system components. The majority of this task will occur of the summer, taking advantage of the extra time between semesters, and ensuring that when the construction of the project begins all parts will be present. The task will begin on April 18th and will finish on July 1st. See Figure 6.1.2b below for information.

Figure 6.1.2b - Project Milestones #2

	Task Name	Duration	Start	Finish
4	Parts Acquisition	54 days	Mon 4/19/10	Thu 7/1/10

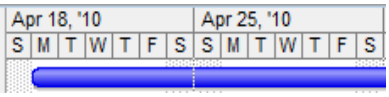

FPGA and PCB Implementation**:**
The next task in the schedule is the implementation of the FPGA, field-programmable gate array, and PCB, printed circuit board. This task consists of the installation and configuration of the components on the FPGA and PCB. These components include the three sensors of the system and the power components for the system. FPGA and PCB implementation will occur from June 21st to July 18th, lasting 4 weeks. See Figure 6.1.2c below for information.

Figure 6.1.2c - Project Milestones #3

	Task Name	Duration	Start	Finish
9	FPGA & PCB Implementation	23 days	Mon 6/21/10	Sun 7/18/10

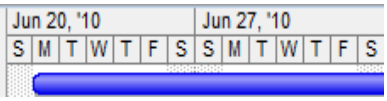

Graphical User Interface Implementation:
The implementation of the graphical user interface is the next task in the schedule. This is the code that will be hosted by the web server, for the home's user to operate and manage the system. This task consists of the writing of all of the classes and functions for the graphical user interface. This will also occur during the summer to utilize the extra time between semesters. This task will begin on the 5th of July and continue on until July 25th, consisting of three weeks. See Figure 6.1.2d below for information.

Figure 6.1.2d - Project Milestones #4

	Task Name	Duration	Start	Finish
7	GUI Implementation	18 days	Mon 7/5/10	Sun 7/25/10

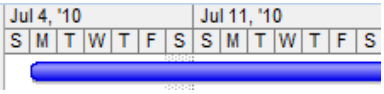

Prototype Display:
This task involves the building of the final prototype display for the project. This will serve as a model of the home that the system would be deployed in. The display will consist of a mock-up door lock and a mock-up window, allowing the system to display the operation of its features. The projected design of the prototype display will be a wooden platform, with a model wall and door, with an overall size of a small table. The building of the prototype display will last for one week, starting on July 19th and ending on July 25th. See Figure 6.1.2e below for more information.

Window Implementation:
The window implementation is in regards to the building of the window display for the system. It will consist of a mock-up window, with the motor system that will open and close the window. This window unit will be incorporated into the prototype display, to allow easy viewing of the system's feature of opening and closing of a window. This task will begin on July 26th and will run for two weeks, ending on August 8th. See Figure 6.1.2e below for information.

Figure 6.1.2e - Project Milestones #5

	Task Name	Duration	Start	Finish
5	Building Prototype Display	6 days	Mon 7/19/10	Sun 7/25/10
6	Window Implementation	11 days	Mon 7/26/10	Sun 8/8/10

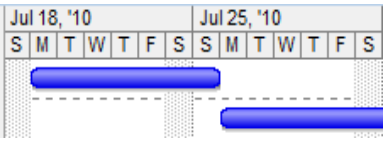

Server Implementation**:**
A concurrent task with the implementation of the window unit is the implementation of the web server. This task will consist of the building and implementation of the server that will run the web server on it. This involves the configuration of the server and the installing and configuring of the web server program. This server will communicate with the FPGA and PCB and integrate the graphical user interface, to host a website allowing operation and management of the system for the home's user to access. The server implementation will last for three weeks, starting on July 26th and finishing on August 18th. See Figure 6.1.2f below for information.

Figure 6.1.2f - Project Milestones #6

	Task Name	Duration	Start	Finish
8	Server Implementation	17 days	Mon 7/26/10	Sun 8/15/10

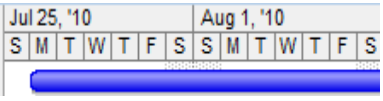

System Integration:
The system integration task deals with the overall integration of the entire system. This consists of the integration of all of the different parts of the system together, consisting of: the FPGA and PCB, server, graphical user interface, window unit, and prototype display. This task will be the final incorporation of all of the different areas of the system, and bringing them all together to form the complete system. The system integration will begin on the 16th of August and run through August 29th, lasting for two weeks. See Figure 6.1.2g below for information.

Figure 6.1.2g - Project Milestones #7

	Task Name	Duration	Start	Finish
10	System Integration	10 days	Mon 8/16/10	Sun 8/29/10

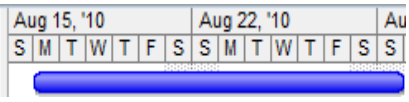

Testing Phase 1:
After the final integration of all of the project's components to makeup the complete system, there will be an initial testing phase. This initial testing phase will consist of running and testing all of the components of the system individually at first, and then testing of the overall system as a whole. This first testing phase will be important, because it will hopefully weed out the majority of the bugs in the system and reveal any

key problems with the overall system. This first testing phase will be for two weeks; it will begin on August 30th and run until September 12th. See Figure 6.1.2h below for information.

Figure 6.1.2h - Project Milestones #8

	Task Name	Duration	Start	Finish
11	Testing Phase 1	10 days	Mon 8/30/10	Sun 9/12/10

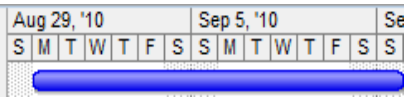

Initial Bug Fixes:

Once the initial testing phase is complete, there will be a time for bug fixes. Throughout the testing phase, there will be a compilation of all problems found with the system. This task will be the specified time for all of those bugs to be fixed and implemented back into the system. This task will last for two weeks, beginning on September 13th and ending on September 26th. See Figure 6.1.2i below for information.

Figure 6.1.2i - Project Milestones #9

	Task Name	Duration	Start	Finish
12	Bug Fixes	10 days	Mon 9/13/10	Sun 9/26/10

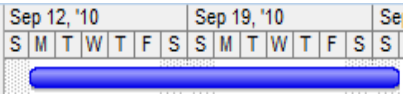

Testing Phase 2:

Once the initial testing phase has completed and the corresponding phase of bug fixing, the second testing phase will take place. A second testing phase is crucial to the project for several reasons: first to ensure that any changes, due to bug fixes, made earlier to the system do not lead to any new problems, and second to try and catch any bugs that were missed in the first phase of testing. This second and final testing phase will start on September 27th and end on October 10, consisting of two weeks. See Figure 6.1.2j below for information.

Figure 6.1.2j - Project Milestones #10

	Task Name	Duration	Start	Finish
13	Testing Phase 2	10 days	Mon 9/27/10	Sun 10/10/10

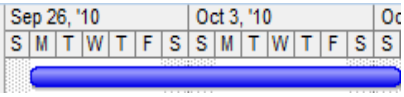

Final Bug Fixes:

The final task of the project is the final phase of bug fixes. This task comes directly after the second and final round of testing on the system. This is the last chance for any problems with the system to be taken care of and fixed. After this final phase of bug fixes the system will be complete and ready for operation. This final task will last for two weeks, beginning on October 11th and ending on October 24th. See Figure 6.1.2k below for information.

Figure 6.1.2k - Project Milestones #11

	Task Name	Duration	Start	Finish
14	Final Bug Fixes	11 days	Mon 10/11/10	Sun 10/24/10

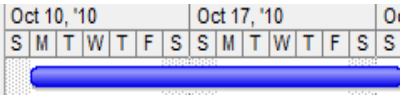

As it has been explained in detail above, the project has been broken up into several high level tasks that incorporate, between themselves, all of the tasks necessary for the project. By creating these time schedules for each task, the project can be monitored and evaluated to ensure the competition of each task. And by ensuring the completion of each task and responsibilities, this gives the project the best possibility of success.

6.2.3 Parts Acquisition

The home monitoring system project is not a purely a software project. As a result a part of the project will be devoted to acquiring the physical components as a means to create the final prototype. If these components are not acquired, the project will not be completed in the allotted time. One of the components will be the sensors. The sensors are broken down into types: temperature sensors, humidity sensors, and window sensor. The window sensor will be a motion sensor. It is necessary for the system to have motion sensors on the windows to detect if the chain system is active. These sensors relay critical information to the CCA for interpretation. If these sensors were not in place it would be nearly impossible for the system to transmit real time information to users of the system.
The central unit which acts as a medium between the sensors placed on the door and windows to the server is the CCA. For the purpose of this project, the CCA acts as the brain if the project were the human body. The CCA will be using an FPGA. An FPGA was chosen over a microcontroller for its low cost and ability to reconfigure. This fact really benefits the team, because once the implementation step is reached using an FPGA should shorten time to completion. The CCA will not be able to complete the transmission of information relayed from the sensors without a server connected to the internet. So, the server performs the same functionality as the CCA between the sensors and server. The only difference is the server connects the CCA with the website. Now a website will need to be created for the successful completion of the project. The website will act as interface between the user and the system. No physical equipment will be needed for this portion of the project at this time. If anything, the material needed for the website will be acquired over the Internet.

The project will need some way to power the system. So, the team will be acquiring a power converter. Part of the reason a power converter is necessary is that not every device implemented will output at the same voltage. So, there is a safety reason for a device. A power converter will be needed to power the window motor. A window motor will need to be acquiring because the group will be implementing a pulley system to open and close the window. If a window motor were not being implemented, one of the goals of the project would not be meet. The power converter will also transmit electricity to the door lock. The same scenario as above with the window motor exists here with the door lock. If the converter were not available, a goal of the project would be missed. The door

lock being electrically locked is a major of the system, and one of the ideas which the entire project is based upon. It will be critical to procure the above set of components in the allotted time for this project.

So, while it is absolutely essential the chosen components meet the requirements specified by the team. If an item which is chosen cannot be found in the appropriate amount of time. It will be necessary for the team to find a substitute which still meets the specification of the system design. The substitute component will not only have to meet the specification of the original component, but be deliverable in a timely matter. The group will need to calculate the estimated time of arrival of many of the physical components of the project. The biggest concern with substituting in components is it is unpredictable how the interaction of a substitute with the other original parts will result. Even if the substitute component meets the specifications of the original component, there can still maybe issue which arise.

If it were possible to design and develop some of the components to reduce cost of the overall development of the prototype would be ideal. However, given the lack of time for the entire process from design to implementation this scenario just is not possible. The downside here is the fact that with premade the initial cost will be far greater than any personally designed component. This makes sense for the simple reason; any design personally created will fit better with the design created by team then a premade component. Premade components are mass produced by companies. There is the added cost put into the price which the team would not incur if the components to the system were being self developed. Another issue to consider if the team wanted to design the components to the system is the small amount of design experience the group has. Specifically, none of the group members has any experience developing a prototype like the project. So, there is a huge learning curve and research which needs to be done for each and every part being developed. After the development of the project, the team will need to perform an extensive testing process on each part upon completion. The best situation in this case would be if a part which had been designed would work the first time upon testing. However, this situation is very unlikely and not guaranteed. What it comes down is time, the team feels if the team constraints were not so severe this would be a cost effective route to take the project in.

As a result of the inability to be able to design and create each component the group will have to purchase the components. This is obviously not as cost effective as designing each component, however; this method fits the time table for the developing of this prototype. Many of steps toward acquiring the parts needed for the project have been completed or are in the process of being completed. The team has already put together a set of requirements for the components to the project. Currently, the team is reaching what available parts will fit the needs for the design of the prototype. The next step will to procure the appropriate parts. Reverting back to previous scenarios, the group will also be choosing substitute components and validating the amount time for shipping the primary parts will be. This scenario as part of the design process, because although the team does not want the worst case to occur, the group will need to prepare regardless.

The group will be procuring parts from websites on the Internet. Some of the common sites are Digikey and Newark. These sites provide users with a database of items and specifications of the chosen item. Each item has a specified price along with an estimated time for delivery. These parts can be purchased by anyone willing to pay for their use. In certain cases students can acquire free samples from these websites, however; the person needs to state their student status before purchase. Stating student status should become an issue. One of the big concerns as the team reaches this part of the design process. The group is getting ready to face some very difficult decisions. This part of the reason as a team decisions are made regarding what parts will be used and how will they be used.

On the one side of acquiring parts the opportunity to find components over the internet is available. However, this is not the only option for the team to consider. For example, the opportunity to acquire parts from a store location like Radio Shack is still an option. There is an upside and a downside to this option. On the one side, purchasing components from a store will be approximately the same. The team will be able to avoid the cost of shipping and handling from an internet provider, but there will be the cost of holding the items in the store. This issue of holding items in stores increases their sale price. On the other hand, it is difficult to state whether the parts bought at a store location will fit into the design. In which case, the scenario is really a hit or misses as to how successful it will be. This argument can be made for purchasing items over the internet.

The big difference with a store is the buyer will know exactly the item they are buying. Through an internet provider, the issue of purchasing items can be avoided as stated above. If a person mentions student status, it is possible to avoid the cost of buying parts from an internet provider. The only cost which may be incurred from this is shipping and handling. The downside to this is the team will only be able to acquire a small amount of parts this way. In the case where the group knows exactly how many components are needed for the design, this may be inefficient. It is a good practice not to purchase the exact amount of components needed for the design. The reason being the team should expect issues regarding the design and components fitting into the design. In which case having more than enough components will make avoiding purchasing parts on multiple occasions not an issue. In reality, going to a store should be the last result to acquire the parts needed for the group. Purchasing parts from an internet provider would better fit the needs of the group. By allowing the group to specify components in a timely manner, the internet providers are a better option. Another benefit of going through an internet provider is there is greater competition by internet providers for your business. In the case of a store location, the group will not being looking at a price but rather if the component is available. It is difficult to really know how many physical locations near the team have the components which are needed for the prototype. While in the case of the internet providers the group will be able to scope which parts best fit for the system and find the best price available.

The milestone chart will be explained at another time in this paper. However, taking the milestone chart into consideration with regard to parts, the group will need to set goals. The goal in this case will be to prioritize what parts will be acquired first. Referring at the design diagrams for the project, the CCA will need to be acquired first. What makes the

CCA so critical for the design of the prototype is it acts as the brain for the entire system. Almost, acting as a medium for the other components of the system, the CCA controls everything. The CCA itself is not a part, what will need to be bought will be the parts which make up the CCA. For example, a FPGA will be a component of the CCA, and this part will need to be found. So, for the project to stay on schedule toward the completion the CCA components will need to be designed, implemented, and tested before any other components. To reduce inefficiency in terms of man hours toward the project, members will work in smaller groups to finish components quickly. While the CCA is the most critical component to the project, it doesn't make sense for the entire team to devote their time to it. The best plan to meet the target of being efficient as a team and finishing the project on time would be for some members to work on the CCA. While, at the same the other group members are acquiring other parts. After the CCA, the next most critical components will be the sensors and the server. A server for the project is already in place, so focus will be put toward acquiring the appropriate sensors. Members who will be assigned the task of acquiring the sensors will be those group members who were assigned the task of learning about the different sensors in this phase of the project.

It is debatable whether the sensors should be bought separately or individually. However, going back to a previous discussion the group is on a limited time table and efficiency could make or break the project. Now it should be noted in this scenario, parts can be order at the same time and arrived at different time intervals. If this occurs, the group will be ready by allocating time appropriately. The teamwork concept developed throughout the project would continue in this situation. The group would focus the bulk effort toward implementing into the design the parts which are available at the present time. Assuming, the group has some knowledge of when the other parts will arrive, time can be allocated in the future to be devoted to the new components. It would be ideal in such a case where components are arriving at different times, the group would be able to finish one component before the other parts come in. Almost applying a just in time concept of manufacturing to this prototype, this will be one of the objective for the team to accomplish. When group members are not assigned the task of acquiring parts in the case above, this would be an excellent time to devote toward the other facets of the project. An example would be the fact, the project is broken down into two different areas: software and hardware. Parts acquisition is purely a hardware specialization. So, in the scenario where hardware is not being worked on, the group will need to change focus to the software side of the project. This will help to keep the project on track in the two areas. In the end the effectiveness of the team to multitask will make the progression of the project smooth.

The best time to acquire parts will be over the summer when our senior design class is no longer in session for our group. This will prevent a time crunch in the fall when we will be completing the project and testing. Another reason to acquire parts over the summer besides reducing stress is the team avoids potential issues. For example, if the group were to wait until the fall to begin acquiring components there could be a delay because of processing time. By requiring the parts early, the team will begin to integrate the parts into the design and surpass expectations for the project. So, if possible the group will

acquire all of the necessary components for the project by the end of summer. This is one of the primary goals for the team to reach the completion of this prototype. As the group gets closer to the deadline for the completion of the project, the focus for this goal will be weighted more heavily. The group agrees the most important goal for the project is the successful completion of the project. The ability for the system to work correctly based upon the design specification is the purpose for any work done on the project. The group still beliefs inefficiency says something about the level of professionalism of the team. The team is aware of the fact there is no competition between teams in terms of who has the better project. However, this truth does not change the fact the team wants to impress judges with completion of the project not only on time but early. After the parts have been completed, the team can then begin integrating and building the system. If the scenario was different and the group had less available time then the team would need to refer back to the milestone chart.

The best way to utilize downtime, if there is a limited amount of time, is to focus on parts of the project which are readily developable in a scenario when parts are being acquired. In the end the group will not be able to get downtime back, so as a result of this fact it is necessary to manage the time available. Otherwise, the project will never be completed on time. These scenarios can not only be applied to the school situation, but also to the real world. Part of the real world is learning how to manage time while working for the company a person is employed by effectively. Similar to the school scenario where a student is graded on their ability to complete a project on time, in the real world an employee is rated on their evaluation as to how well the individual performed for the company. Everything which was looked at in this section plays into the evaluation at the end of the assignment. Seeing parts acquisition is the first step toward completing a prototype which developing a physical system. The next big decision is deciding by what means the team is going to acquire the necessary parts for the physical system to be implemented. Once the decision of whether or not the parts will be acquired or designed based on the amount of time available to design the system is finished. The group will then make a decision as to where the parts will be acquired from. The team will base this decision on the amount of time available. Many of these decisions will be based upon the time table for the design of the project.

6.3 Project Budget

All parts and associated prototyping costs will be of the sole responsibility of the team. All total costs will be split evenly among all four team members. The proposed budget for this project is 300 dollars and is broken down individually in Table 6.3a below.

Table 6.3a - Project's Projected Budget

Parts	Budgeted Cost	Project Cost	Reproducible Cost
Door Lock	$20.00	Free	$20.00
Solenoids	$20.00	$132.82	$40.00
Temperature/Humidity Sensors	$20.00	$50.08	$45.00
Window/Door Sensors	$20.00	$49.38	$50.00
Window Motor	$50.00	$24.44	$25.00
Circuit card assembly (FPGA)	$25.00	$58.74	$15.00
Printed Circuit Board	$50.00	$98.95	$50.00
PCB Components	$45.00	$275.44	$125.00
Server – Hardware	Personal Computer	Personal Computer	Personal Computer
Server - Software	Free – Open Source	Free – Open Source	Free – Open Source
Building Materials	$50.00	$35.55	$30.00
Total	**$300.00**	**$724.40**	**$400.00**

As was expected our project was budgeted a little low. In the table above there are three different budgets displayed. The first budget which is displayed in the second column from the left was the projected budget for the project. The second budget displayed is in the third column from the left and is the actual money spent for the project. And the third budget given is in the far most column to the right and is for if this project were to be reproduced. The reason that the second budget is so dramatically different is because there was some trial and error. This budget includes all shipping and handling, which the group did not take into full consideration. And it also includes cost for having to order extra parts or replacement parts for components that were broken. And the last budget was included to show an actual cost of the project without any extra or replacement parts being purchased.

6.4 Lessons Learned

During this project several critical lessons were learned. First when designing a circuit it is best to decide whether a processor, microprocessor, microcontroller, or FPGA is to be used, if at all. This decision will affect the rest of the circuit. The second decision to be made is the communication methods. Does the circuit need to communicate with an outside source? If so, how will it do it? Are there special parts required for the method of communication chosen? Are there external signals that need to be taken into account? Is the circuit required to supply signals to outside receivers. If there are external signals that need to be handled, how will this be done? Does the circuit require analog to digital converters or digital to analog converters? Are there any other special parts required for this circuit? If so what are they? These were the main questions that were decided first.

Once those questions are decided the next thing to focus on is power. Having answered the main questions, the designer now has a decent idea of the parts needed for the circuit. With reference to the datasheets, it is best to compile a list of parts and their respective power requirements. For example, this project has an FPGA which requires 1.2V between 1.14V and 1.26V and 3.3V between 3.135V and 3.465V. Just by having this one part, the designer is forced to decide how to supply 1.2V and 3.3V within the required range. One important thing learned was that the designer needs to take into account all of the parts using power and design or buy the supply that meets the one part with the tightest range. This will avoid intermittent failures by parts slowly burning up. After gathering all the required voltages and their tolerances, deciding how to supply the circuit with those specific voltages becomes slightly easier. This is because there is a specific requirement that needs to be met. This eliminates many of the choices. Also while choosing parts it proved to be easier to design in repetition. For example, if it is possible to use the same part twice for two different things instead of using two different parts, using one part is preferable. This allows for familiarity in the parts. It also may help the budget, as most suppliers discount the parts for purchases of a specific quantity or higher.

The grounding of circuit is extremely important. A wire or a trace, over a distance may not be at the same potential as when it started. To avoid this problem it was recommended that the circuit card have an entire layer dedicated to ground. This ground plane should be 3oz copper. It was also recommended that the power signals have their own layer. However for this project it deemed to be too far above budget for each power signal to have its own power plane.

Another thing learned was that the analog and digital signals should be kept separate on the circuit. When laying out the PCB the designer should allocate a section for the analog chips and a section for the digital chips. Each should have its own power supply. The analog ground and digital ground should be at the same level but isolated. It was recommended that an opto-isolator be used for this purpose. By both sections having their own power supplies it removes the possibility of having current loops. This highly reduces the noise on the analog half of the circuit. External noise can still interfere however the noise caused by the coupling of the digital signals is greatly reduced. It was also recommended that filtering capacitors be placed between power and ground right at the power pins of noise sensitive components. For example, op-amps should have a small, high frequency, capacitor between power and ground physically close to the power pin of the IC. This project requires the use of several analog to digital converters. To keep the analog ground plane and digital ground plane separate the analog to digital converters will need to be placed on the border of the two ground planes. It was highly recommended that the designers make use of the isolated analog ground pin and the digital ground pin on the analog to digital converter IC.

7 Appendix

7.1 References

System Overview

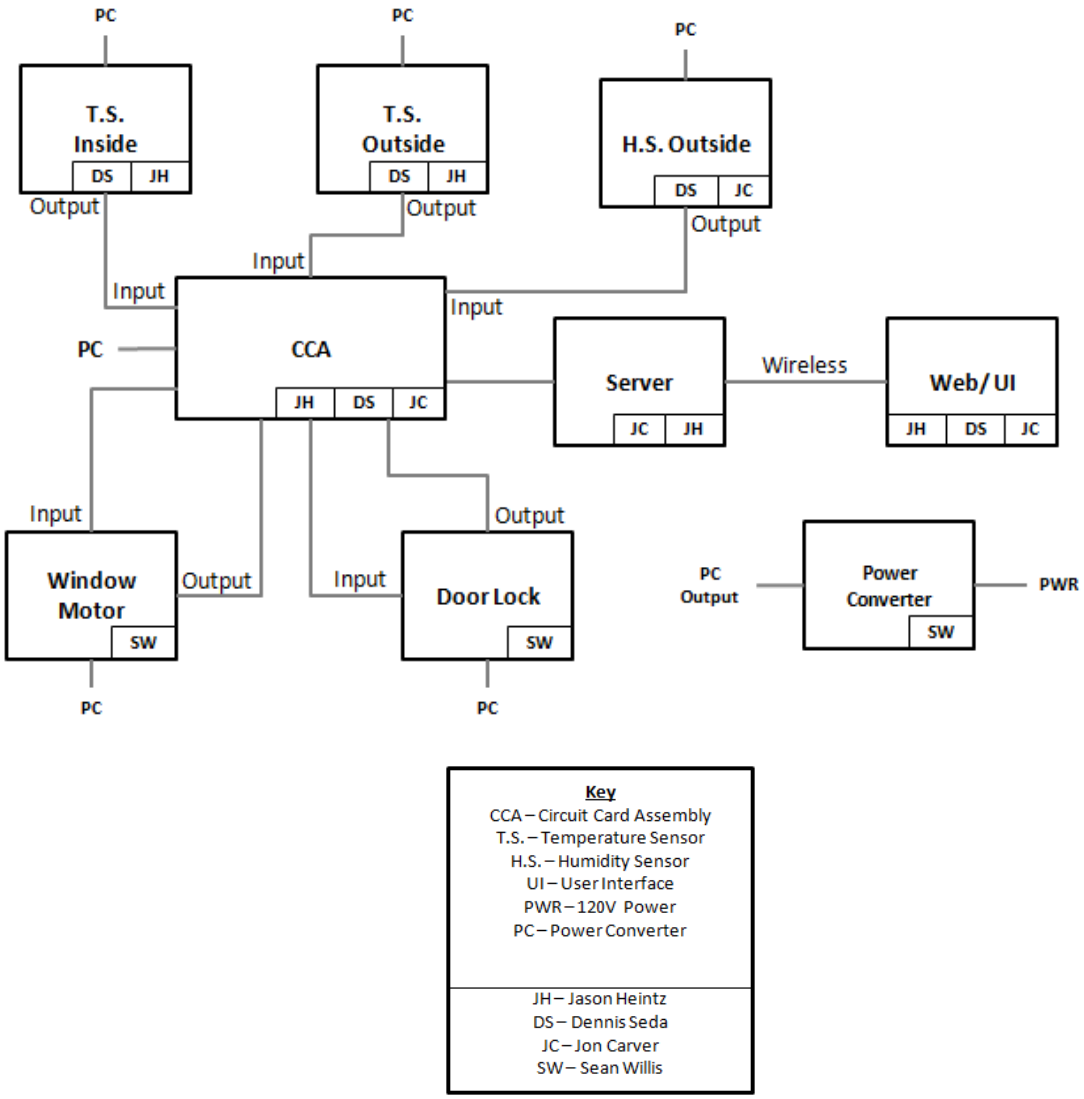

Milestone Overview: #1-6

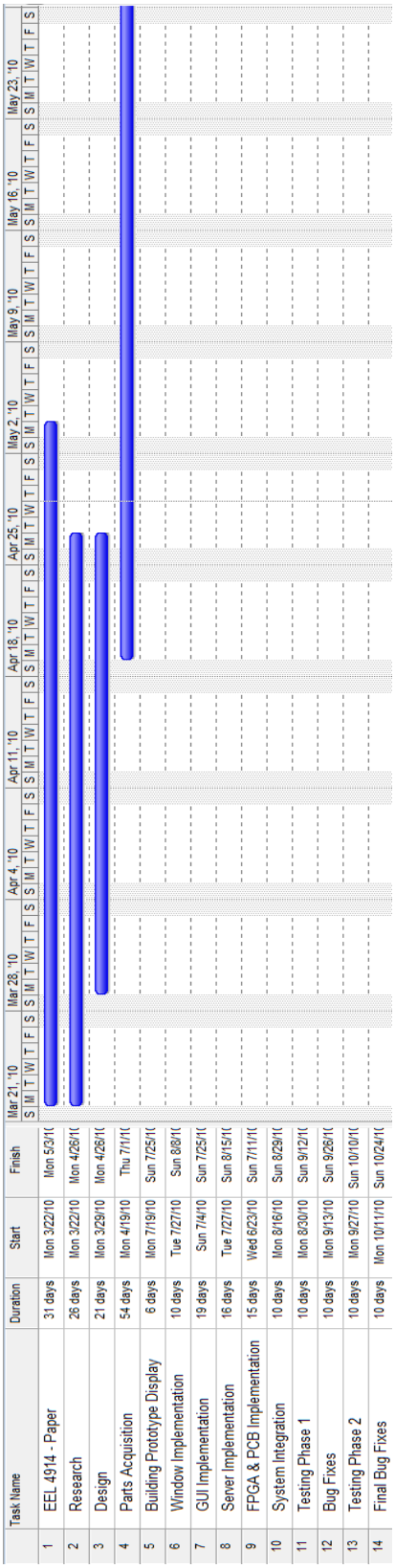

	Task Name	Duration	Start	Finish
1	EEL 4914 - Paper	31 days	Mon 3/22/10	Mon 5/3/1(
2	Research	26 days	Mon 3/22/10	Mon 4/26/1(
3	Design	21 days	Mon 3/29/10	Mon 4/26/1(
4	Parts Acquisition	54 days	Mon 4/19/10	Thu 7/1/1(
5	Building Prototype Display	6 days	Mon 7/19/10	Sun 7/25/1(
6	Window Implementation	10 days	Tue 7/27/10	Sun 8/8/1(
7	GUI Implementation	19 days	Sun 7/4/10	Sun 7/25/1(
8	Server Implementation	16 days	Tue 7/27/10	Sun 8/15/1(
9	FPGA & PCB Implementation	15 days	Wed 6/23/10	Sun 7/11/1(
10	System Integration	10 days	Mon 8/16/10	Sun 8/29/1(
11	Testing Phase 1	10 days	Mon 8/30/10	Sun 9/12/1(
12	Bug Fixes	10 days	Mon 9/13/10	Sun 9/26/1(
13	Testing Phase 2	10 days	Mon 9/27/10	Sun 10/10/1(
14	Final Bug Fixes	10 days	Mon 10/11/10	Sun 10/24/1(

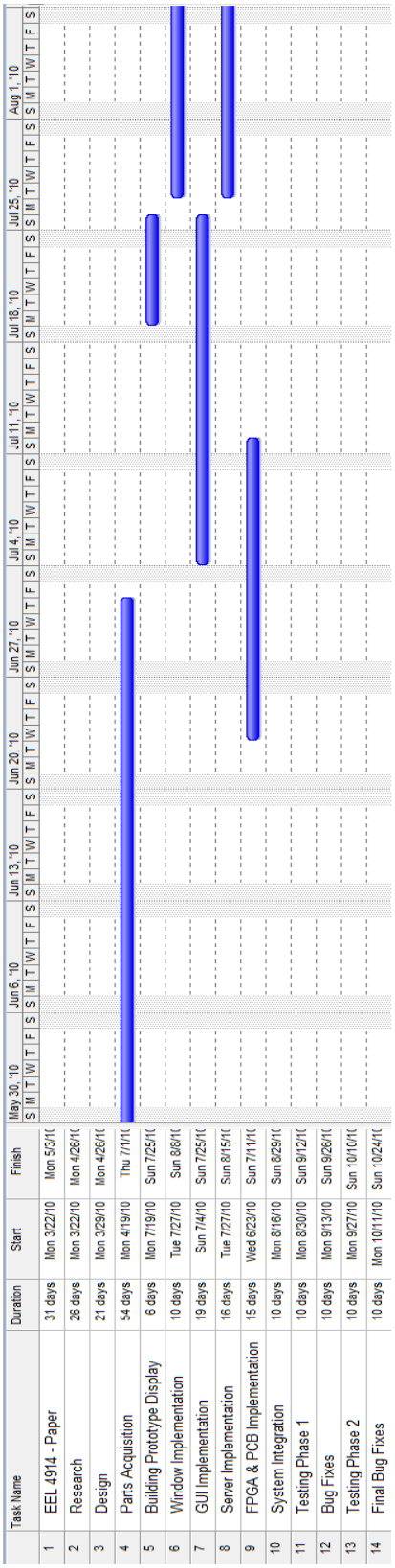

	Task Name	Duration	Start	Finish
1	EEL 4914 - Paper	31 days	Mon 3/22/10	Mon 5/3/1(
2	Research	26 days	Mon 3/22/10	Mon 4/26/1(
3	Design	21 days	Mon 3/29/10	Mon 4/26/1(
4	Parts Acquisition	54 days	Mon 4/19/10	Thu 7/1/1(
5	Building Prototype Display	6 days	Mon 7/19/10	Sun 7/25/1(
6	Window Implementation	10 days	Tue 7/27/10	Sun 8/8/1(
7	GUI Implementation	19 days	Sun 7/4/10	Sun 7/25/1(
8	Server Implementation	16 days	Tue 7/27/10	Sun 8/15/1(
9	FPGA & PCB Implementation	15 days	Wed 6/23/10	Sun 7/11/1(
10	System Integration	10 days	Mon 8/16/10	Sun 8/29/1(
11	Testing Phase 1	10 days	Mon 8/30/10	Sun 9/12/1(
12	Bug Fixes	10 days	Mon 9/13/10	Sun 9/26/1(
13	Testing Phase 2	10 days	Mon 9/27/10	Sun 10/10/1(
14	Final Bug Fixes	10 days	Mon 10/11/10	Sun 10/24/1(

Milestone Overview: #7-11

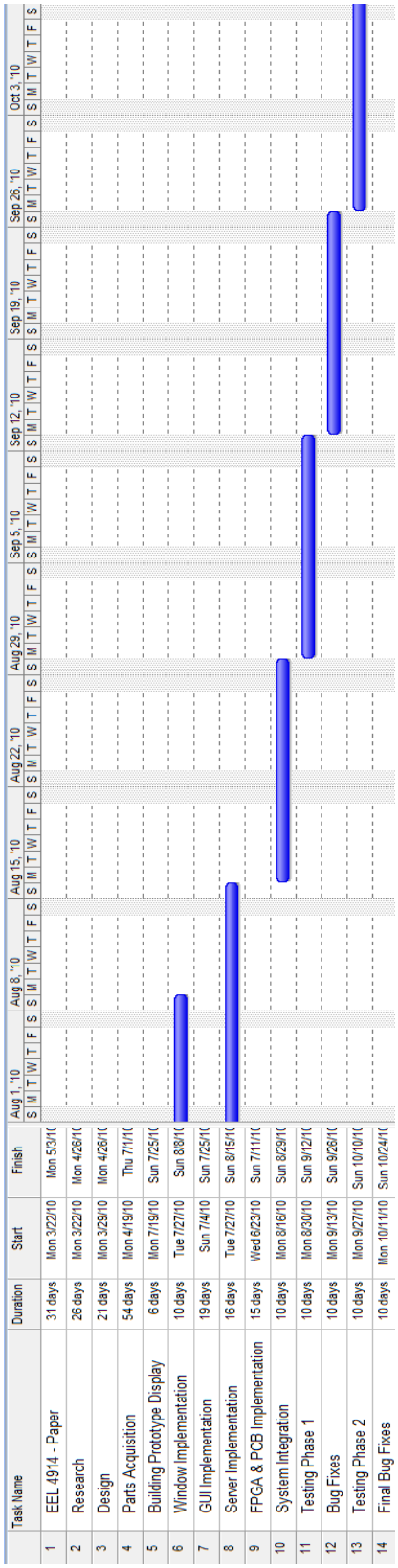

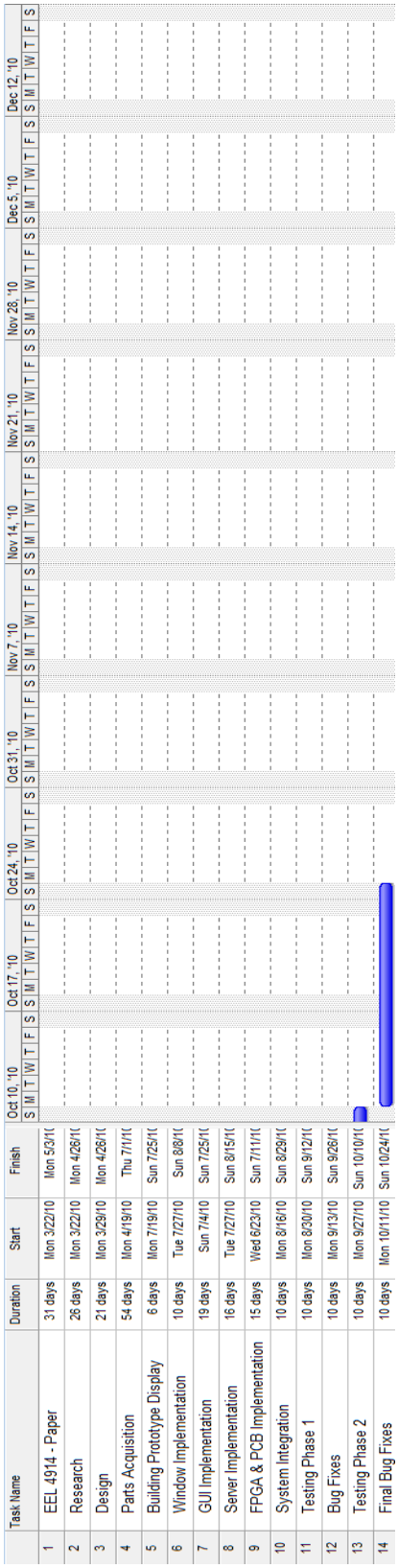

7.2 Works Cited

[1] ECE 445: Senior Design @ UIUC – Projects
http://courses.ece.illinois.edu/ece445/?f=Projects&sem=fall2006
[2] Automated Door Lock System – Project Outline
http://www.cohortviii.com/~matthes/projects/SeniorDesignProject/group23/
[3] Internet Accessible Home Control and Monitoring System
http://rareed.com/Projects/SeniorDesign/index.html
[4] Java SE for Embedded Overview
http://java.sun.com/javase/embedded/overview.jsp#intro
[5] Introduction to Java EE platform
http://java.sun.com/javaee/5/docs/firstcup/doc/p3.html
[6] The 6-12V DC Hobby Motor:
http://skycraftsurplus.com/dcmotor6-12vdc.aspx
[7] The Coreless DC Gearhead Motor:
http://skycraftsurplus.com/corelessdcgearheadmicromotor.aspx
[8] The High Torque Motors:
http://scientificsonline.com/product.asp?pn=3041860&cm_mmc=Mercent-_-Google-_-NULL-_-3041860&mr:trackingCode=B050FABE-5B9D-DE11-AC14-002219318F67&mr:referralID=NA
[9] The Pittman Motor:
http://skycraftsurplus.com/pittmanandreg6to24vdcgearheadmotor.aspx
[10] The Super Speed 9-18VDC Motor:
http://www.radioshack.com/product/index.jsp?productId=2102827
[11] Miniature Metal Gear Motor:
http://www.hobbyengineering.com/H2532.html
[12] Miniature Gear Motor: Right Angle Shaft
http://www.HobbyEngineering.com/H1212.html
[13] AC Synchronous Motors
http://www.anaheimautomation.com/products/ac/ac-motors.php?tID=107&pt=t&cID=26
[14] Technical Summery- classified locations- UL the standard in safety
http://www.ul.com/global/eng/pages/offerings/services/hazardouslocations/techsummary/
[15] Product Safety Tips: GFCIs – UL the standard in safety
http://www.ul.com/global/eng/pages/offerings/perspectives/consumer/productsafety/groundfault/
[16] Apache Tomcat 6.0 - Realms. The Apache Software Foundation.
http://www.apache.org
[17] Apache Tomcat 6.0 - SSI. The Apache Software Foundation. http://www.apache.org
[18] DS1822 Econo 1-Wire Digital Thermometer. Maxim Dallas Semiconductor.
http://datasheets.maxim-ic.com/en/ds/DS1822.pdf
[19] LM19 Temperature Sensor. National Semiconductor.
http://www.national.com/mpf/LM/LM19.html#Overview
[20] CHIPCAP-D Humidity Sensor. Novasensor.
http://www.newark.com/novasensor/chipcap-d/humidity-sensor/dp/10R6244
[21] SHT11 Humidity Sensor. Sensirion.
http://www.newark.com/sensirion/sht11/humidity-sensor/dp/69C4848

[22] SHT71 Humidity Sensor. Sensirion.
http://www.newark.com/sensirion/sht71/humidity-sensor/dp/18M2987
[23] AMS-7 Magnetic / Reed Switch. Amseco.
http://www.midsouthcable.com/AmsecoSMMags.htm
[24] PSA240/30 Reed Proximity Switch. Assemtech.
http://www.newark.com/assemtech/psa240-30/reed-proximity-switch/dp/09WX7022
[25] Tornado Web Server. FriendFeed.
http://www.tornadoweb.org/documentation#overview
[26] Apache HTTP Web Server. The Apache Software Foundation.
http://httpd.apache.org/
[27] Apache Tomcat Web Server. The Apache Software Foundation.
http://tomcat.apache.org/
[28] Nostromo Web Server. Nostromo. http://www.nazgul.ch/dev/nostromo_man.html
[29] ENC28J60/SO Ethernet Controller IC. Microchip.
http://www.newark.com/microchip/enc28j60-so/ethernet-controller-ic/dp/96K3660
[30] UM232R USB-UART. Future Technology Devices International.
http://www.newark.com/ftdi/um232r/evaluation-kit-usb-uart-ttl-ft232rl/dp/93K1085
[31] C. Roth, *Fundamentals of Logic Design*, 5th ed., Canada: Thomson, 2006.
[32] C. Park, C. Fleddermann, D. Babcock, and L. Morse, *Senior Design For Electrical and Computer Engineering Students*. Boston, MA: Pearson Custom Publishing, 2004.
[33] H. Huang, *MC68HC11: An Introduction Software and Hardware Interfacing*, 2nd ed., Albany, NY: Delmar, 2001.
[34] (2010, April 25) Embedded Ethernet Definition. [Online]. Available:
http://www.pcmag.com/encyclopedia_term/0,2542,t=Embedded+Ethernet&i=42545,00.asp
[35] R. Daniel. (2010, April 25) Embedding Ethernet Connectivity. [Online]. Available:
http://www.embedded.com/98/9804fe1.htm
[36] R. Andraka. (2010, April 25) FPGA Basics. [Online]. Available:
http://www.andraka.com/whatisan.htm
[37] M. Brain. (2010, April 25) How Microcontrollers Work. [Online]. Available:
http://www.howstuffworks.com/microcontroller.htm
[38] "Microcontroller Vs FPGA". April 25 2010.
<http://www.ece.msstate.edu/courses/design/ece4542/2003_spring/av_switchbox/rd/Microcontroller%20VS%20FPGA.pdf>.
[39] J. Phillips, A. Sudarsanam, H. Samala, R. Kallam, J. Carver, and A. Dasu, "Methodology to Derive Context Adaptable Architectures for FPGAs," *IET Computers & Digital Techniques*, vol. 3, iss. 1, 2009
[40] All calculations done with Trace Width Calculator based on IPC-2221. Copyright 2007 Brad Suppanz
[40] L. Marco. Measuring Software Complexity. Enterprise Systems Journal. April 1997.
http://cispom.boisestate.edu/cis320emaxson/metrics.htm

8 Copyright Permission Requests

==========

---------- Forwarded message ----------
From: **Ray Andraka, Andraka Consulting Group, Inc** <ray@andraka.com>
Date: Tue, Mar 23, 2010 at 10:33 AM
Subject: Re: Permissions to reference site
To: Dennis Seda <dseda10@gmail.com>
Cc: info@andraka.com

Yes, you may reference the site. Please include proper attribution in your reference.
Thanks

At 11:03 PM 3/22/2010, Dennis Seda wrote:
My name is Dennis Seda a student at the University of Central Florida and I would like to reference your site as a source in my Senior Design Paper.

--Ray Andraka, P.E.
President, the Andraka Consulting Group, Inc.
401/884-7930 Fax 401/884-7950
email ray@andraka.com
http://www.andraka.com

==========

```
Staff Comment                          2010-04-19 13:25:46 PST
| By: Moe R
|
| Thanks for asking.
|
| Yes, you may use the material from the website. Please complete
| the attached form and return via scan-and-e-mail, mail, or fax,
| as instructed on the form. Please attribute the quoted material
| with: "Copyright Maxim Integrated Products
| (http://www.maxim-ic.com). Used by permission."
|
| You may use the material as soon as you send the form (you do not
| have to wait for reply).
|==============================================================
| Submit Request                         2010-04-17 09:08:10 PST
| By: jason@heintzfamily.com
|
| Hello,
|
| My name is Jason Heintz and I am a senior Computer Engineering
| student at the University of Central Florida.  I am currently
| working on my senior design project and we have chosen to use
| your DS1822 Digital Thermometer in our project.  I am writing a
| paper about the project and its components and I was wondering if
| I could have permission to re-print the DS1822 Block Diagram in
| my paper? With of course the proper citation to Maxim Integrated
| Products.  I thank you for you time and consideration
|
==============================================================
```